ELECTRICAL SYMBOLS AND ABBREVIATIONS

ONE-LINE DIAGRAM SYMBOLS

- H-O-A SELECTOR SWITCH
- STOP/START PUSHBUTTON STATION
- LIGHTING ARRESTER AND SURGE CAPACITOR
- TRANSFORMER
- TRANSFORMER (SHIELDED)
- M — MOTOR STARTER RELAY AND CONTACTOR
- ETM — ELAPSED (RUNNING) TIME METER
- CONTROL POWER TRANSFORMER
- MCP — CIRCUIT BREAKER (MOTOR CIRCUIT PROTECTOR)
- DISCONNECT SWITCH
- BUS STAB
- CT — CURRENT TRANSFORMER
- MOTOR RESISTANCE TYPE WINDING HEATER
- THERMAL OVERLOAD CIRCUIT
- BREAKER (THERMAL MAGNETIC TYPE)
- FUSE
- CONTACT (NORMALLY OPEN)
- CONTACT (NORMALLY CLOSED)
- PUSHBUTTON (NORMALLY OPEN)
- PUSHBUTTON (NORMALLY CLOSED)
- LIMIT SWITCH (NORMALLY OPEN)
- TIME DELAY CONTACT
- PILOT LIGHT W/COLOR INDICATED (A-AMBER ,G-GREEN ,R-RED)
- S — SOLENOID VALVE
- DIFFERENTIAL PRESSURE SWITCH
- E N — AUTOMATIC TRANSFER SWITCH
- DISCONNECT SWITCH 400/3/400AF/N3R INDICATES FRAME SIZE/POLES/FUSE AMPACITY/ENCLOSURE

PANELS AND RELATED EQUIPMENT

- PANELBOARD SURFACE MOUNTED (REFER TO PANEL SCHEDULE)
- PANELBOARD FLUSH MOUNTED (REFER TO PANEL SCHEDULE)

ABBREVIATIONS

A	AMPERE
AC	ABOVE COUNTER
AFF	ABOVE FINISHED FLOOR
AFG	ABOVE FINISHED GRADE
AIC	AMPERE INTERRUPTING CAPACITY
BLDG	BUILDING
C	CONDUIT
CAB	CABINET
CKT	CIRCUIT
CPSE	CITY PUBLIC SERVICE ENERGY
CONN	CONNECT OR CONNECTION
CONTR	CONTRACTOR
COSA	CITY OF SAN ANTONIO
CT	CURRENT TRANSFORMER
EA	EACH
EF	EXHAUST FAN
ELEC	ELECTRIC
EMER	EMERGENCY
EMT	ELECTRIC METALLIC TUBING
EWC	ELECTRIC WATER COOLER
FACP	FIRE ALARM CONTROL PANEL
FLA	FULL LOAD AMPS
FLEX	FLEXIBLE CONDUIT
GFCI	GROUND FAULT CIRCUIT INTERRUPTER
GND	GROUND
HOA	HAND-OFF-AUTO
HP	HORSEPOWER
HPS	HIGH PRESSURE SODIUM
HTR	HEATER
IMC	INTERMEDIATE METAL CONDUIT
J-BOX	JUNCTION BOX
kVA	KILOVOLT AMPERE
kVAR	KILOVOLT AMPERE REACTIVE
kW	KILOWATT
LTG	LIGHT OR LIGHTING
MFG	MANUFACTURER
MCB	MAIN CIRCUIT BREAKER
MCC	MOTOR CONTROL CENTER
MCP	MOTOR CIRCUIT PROTECTOR
MIN	MINIMUM
MH	METAL HALIDE
MLO	MAIN LUG ONLY
MSB	MAIN SWITCHBOARD
MTD	MOUNTED
NEC	NATIONAL ELECTRICAL CODE
N3R	NEMA 3R
N4X	NEMA 4X
NTS	NOT TO SCALE
ø	PHASE
OL	OVERLOAD
OVHD	OVERHEAD
PA	PUBLIC ADDRESS
PVC	POLYVINYL CHLORIDE
RECPT	RECEPTACLE
REQ'D	REQUIRED
REQ'T	REQUIREMENT
RGS	RIGID GALVANIZED STEEL
SC	SPLIT CIRCUIT
SFD	SMOKE FIRE DAMPER
SW	SWITCH
T/D	TELEPHONE & DATA
TTB	TELEPHONE TERMINAL BOARD
TYP	TYPICAL
UC	UNDER COUNTER
UG	UNDERGROUND
UNO	UNLESS NOTED OTHERWISE
V	VOLT
W	WATTS
W/	WITH
WP	WEATHER PROOF
XFMR	TRANSFORMER

STATE OF TEXAS
DEAN T. ALDERSON
54441
LICENSED
PROFESSIONAL ENGINEER
11/17/16

Alderson & Associates, Inc.
F-1008

PROJECT # 16058

Alderson & Associates, Inc.
7700 Torino St, Suite 101
San Antonio, TX 78229
Telephone: 210.614.1110
©2016 Alderson & Associates, Inc.
F-1008

REVISIONS		
NO	DATE	DESCRIPTION

CITY OF DEL RIO, TEXAS
LAUGHLIN AIR FORCE BASE
T-6 PREFABRICATED AIRCRAFT SUN SHADES
ELECTRICAL SYMBOLS & ABBREVIATIONS

JOB No: C-123922
DATE: 11/17/16
DRAWN BY: DTA
CHECKED BY: DTA
SHEET E0.0

PREPARED BY:
BAIN MEDINA BAIN, INC.
ENGINEERS & SURVEYORS
7073 San Pedro
San Antonio, Texas 78216
210/494-7223

PRINTED: 11/23/2016 @ 9:55AM

FILE NAME: P:\16058 T-6 Prefabricated Aircraft Sun Shades\Drawings\MEP\Elec\E0.0.dwg

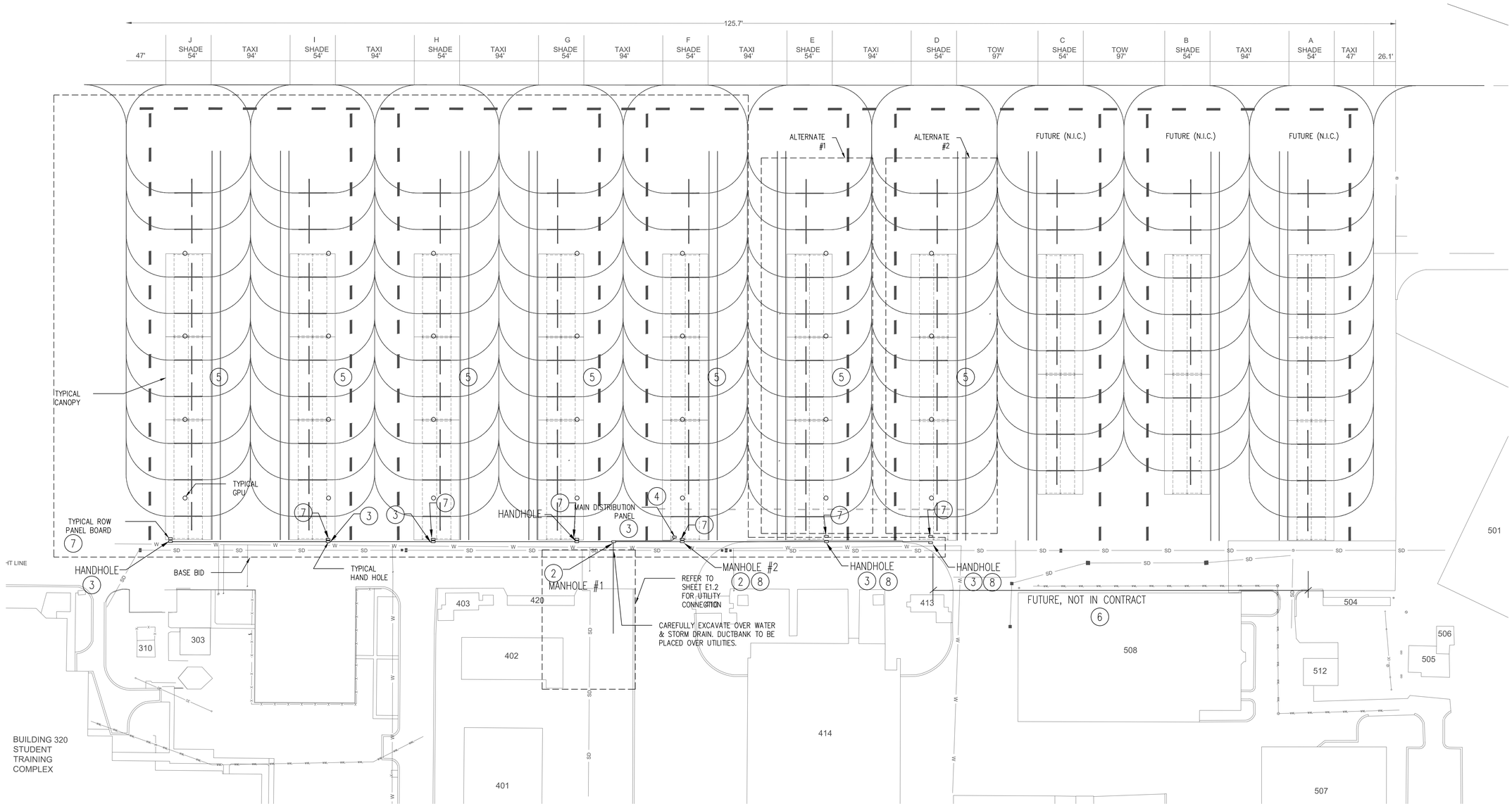

PRINTED: 11/23/2016 @ 4:10PM

FILE NAME: P:\16058 T-6 Prefabricated Aircraft Sun Shades\Drawings\MEP\Elec\E1.1.dwg

PLAN NORTH

1 ELECTRICAL SITE PLAN

SCALE: 1" = 60'

GENERAL NOTES:

1. REFER TO CIVIL DRAWINGS FOR PHASING REQUIREMENTS.

KEYED NOTES:

(APPLIES TO THIS SHEET)

1. REFER TO LAYOUT SHEET E 1.3 FOR CONDUIT PATHWAY AND ROUTING. 0 REFER TO SHEET E4.1 FOR SIZING.
2. MANHOLE, REFER TO DETAIL FOR INFORMATION, SHEETS E5.1 & E5.2.
3. HANDHOLE, REFER TO DETAIL 1/E5.3.
4. MOUNT MDP ON LEGS, ADJACENT TO ROW PANEL FOR ROW "F". REFER TO DETAIL 3/E2.1.
5. REFER TO SHEET E2.1 FOR POWER AND E3.1 FOR LIGHTING.
6. ALL WORK FOR ROWS A-C FUTURE, NOT IN CONTRACT
7. ROW PANEL.
8. FOR HANDHOLES ON ROWS D AND E, MAKE SIZE PROVISIONS OF HANDHOLE IN BASE BID FOR FUTURE CONDUCTORS FOR ROWS A, B, C, WITH 4-3/0 WITH GROUND

STATE OF TEXAS
DEAN T. ALDERSON
54441
LICENSED
PROFESSIONAL ENGINEER
11/17/16
Alderson & Associates, Inc.
F-1008

PROJECT # 16058

Alderson & Associates, Inc.
7700 Torino St, Suite 101
San Antonio, TX 78229
Telephone: 210.614.1110
©2016 Alderson & Associates, Inc.
F-1008

REVISIONS		
NO	DATE	DESCRIPTION

CITY OF DEL RIO, TEXAS
LAUGHLIN AIR FORCE BASE
T-6 PREFABRICATED AIRCRAFT SUN SHADES

ELECTRICAL SITE PLAN

PREPARED BY:
BAIN MEDINA BAIN, INC.
ENGINEERS & SURVEYORS
7073 San Pedro
San Antonio, Texas 78216
210/494-7223

JOB No:	C-123922
DATE:	11/17/16
DRAWN BY:	DTA
CHECKED BY:	DTA
SHEET	E1.1

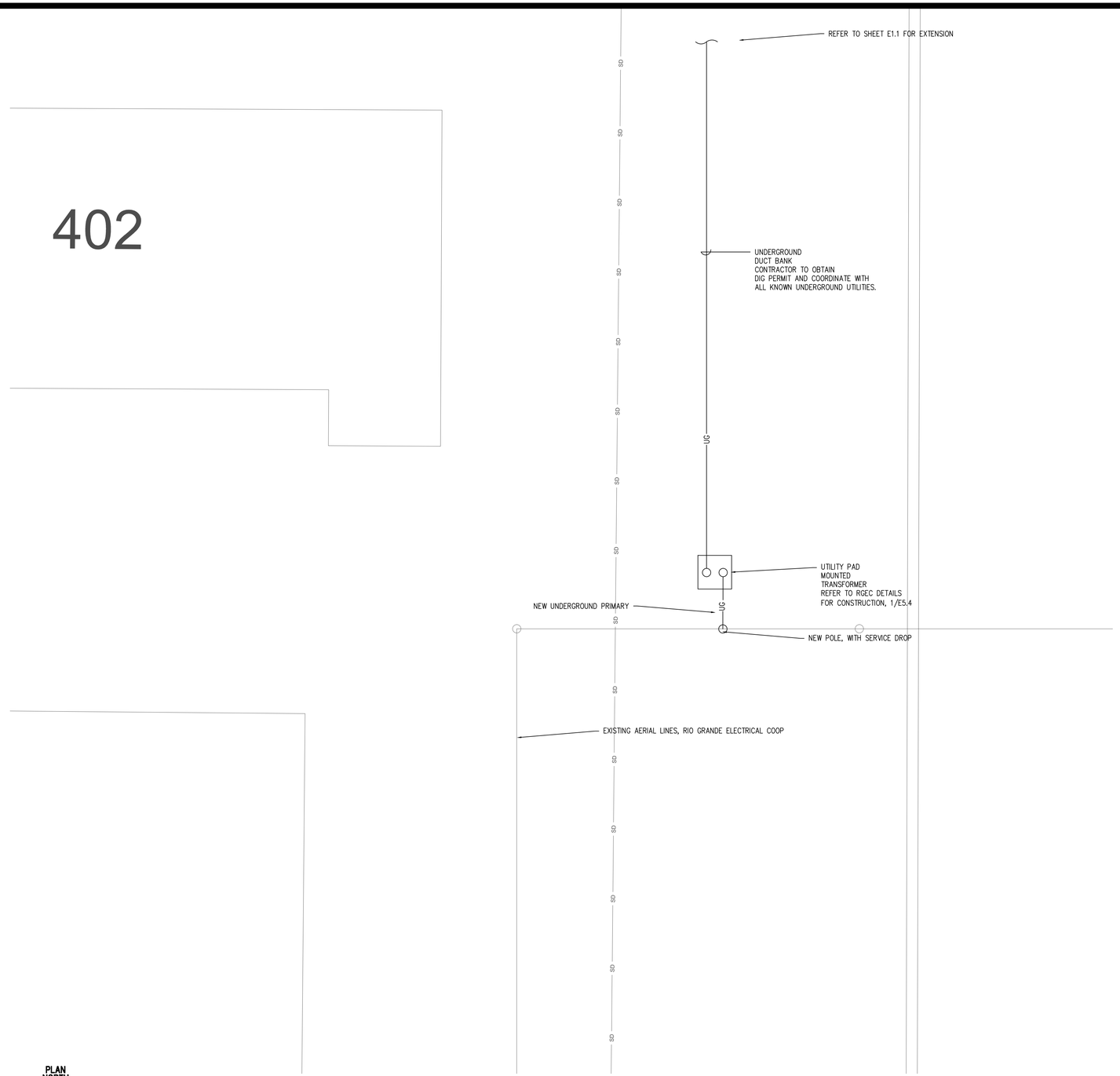

1 **ELECTRICAL UTILITY PLAN**

SCALE: 1" = 10"

PRINTED: 11/23/2016 @ 9:56AM

FILE NAME: P:\16058 T-6 Prefabricated Aircraft Sun Shades\Drawings\MEP\Elec\E1.2.dwg

STATE OF TEXAS
DEAN T. ALDERSON
54441
LICENSED
PROFESSIONAL ENGINEER
11/17/16

Alderson & Associates, Inc.
F-1008

PROJECT # 16058

Alderson & Associates, Inc.

7700 Torino St, Suite 101
San Antonio, TX 78229
Telephone: 210.614.1110
©2016 Alderson & Associates, Inc.
F-1008

REVISIONS		
NO	DATE	DESCRIPTION

CITY OF DEL RIO, TEXAS
LAUGHLIN AIR FORCE BASE
T-6 PREFABRICATED AIRCRAFT SUN SHADES

ELECTRICAL UTILITY PLAN

PREPARED BY:
BAIN MEDINA BAIN, INC.
ENGINEERS & SURVEYORS
7073 San Pedro
San Antonio, Texas 78216
210/494-7223

JOB No:	C-123922
DATE:	11/17/16
DRAWN BY:	DTA
CHECKED BY:	DTA
SHEET	E1.2

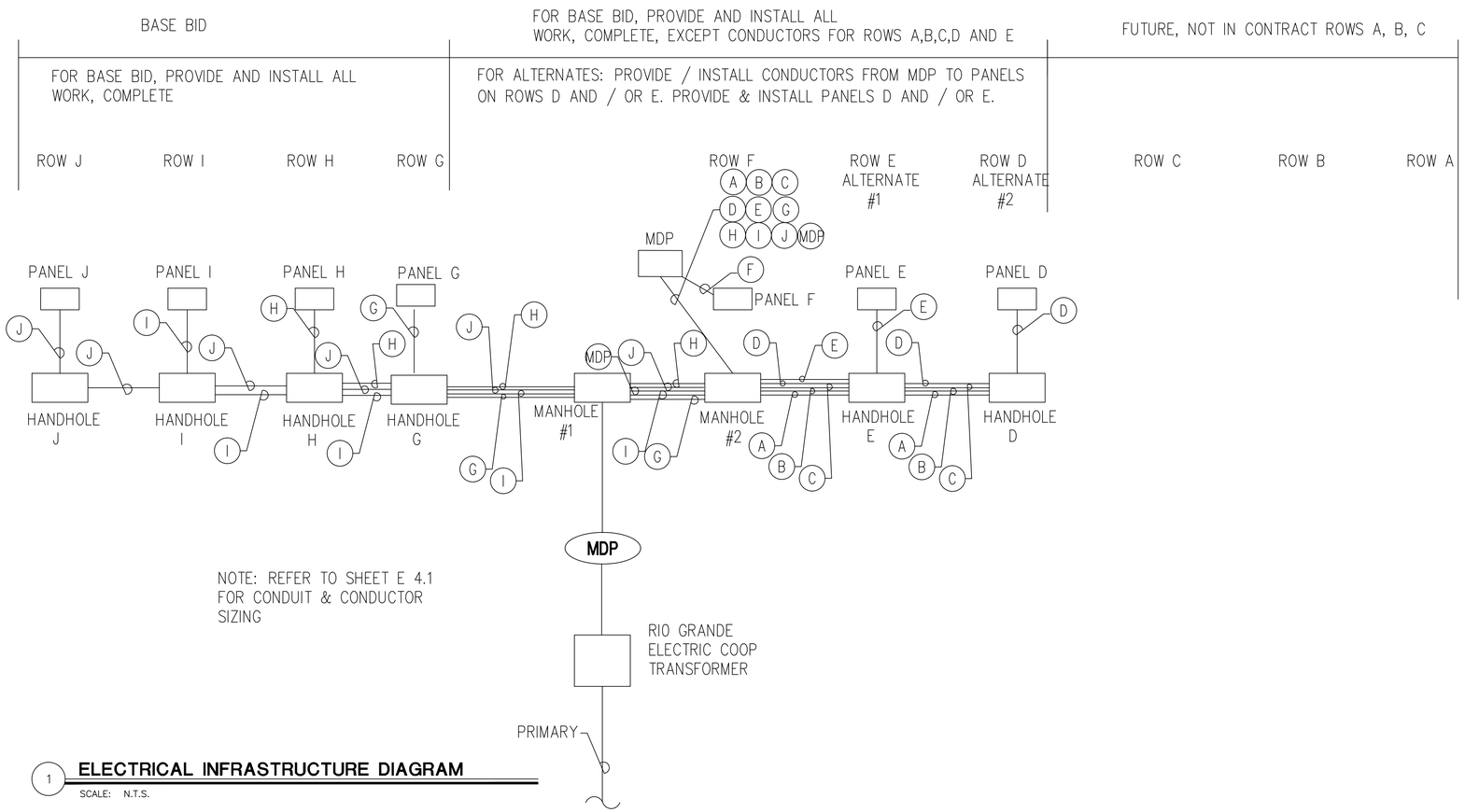

NOTE: REFER TO SHEET E 4.1 FOR CONDUIT & CONDUCTOR SIZING

1 **ELECTRICAL INFRASTRUCTURE DIAGRAM**

SCALE: N.T.S.

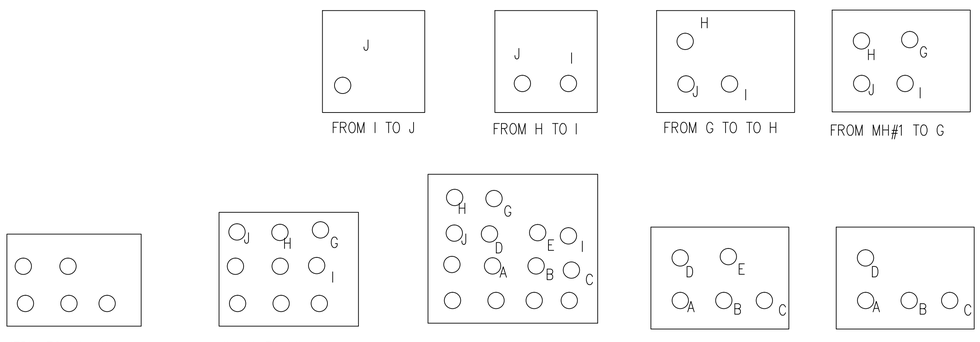

NOTE: REFER TO CIVIL DRAWINGS FOR TRENCH, BACKFILL AND PATCHING REQUIREMENTS DUCTBANKS NOT LABELED ARE THE MAIN SERVICE TO THE MDP

REFER TO ALTERNATE SCHEDULE ON CIVIL DRAWINGS

2 **CROSS SECTION TRENCH DIAGRAM**

SCALE: N.T.S.

STATE OF TEXAS
DEAN T. ALDERSON
54441
LICENSED
PROFESSIONAL ENGINEER
11/17/16
Alderson & Associates, Inc.
F-1008

PROJECT # 16058

Alderson & Associates, Inc.
7700 Torino St, Suite 101
San Antonio, TX 78229
Telephone: 210.614.1110
©2016 Alderson & Associates, Inc.
F-1008

REVISIONS		
NO	DATE	DESCRIPTION

CITY OF DEL RIO, TEXAS
LAUGHLIN AIR FORCE BASE
T-6 PREFABRICATED AIRCRAFT SUN SHADES

ELECTRICAL LAYOUT

PREPARED BY:
BAIN MEDINA BAIN, INC.
ENGINEERS & SURVEYORS
7073 San Pedro
San Antonio, Texas 78216
210/494-7223

JOB No: C-1238.22
DATE: 11/17/16
DRAWN BY: DTA
CHECKED BY: DTA
SHEET E1.3

PRINTED: 11/23/2016 @ 4:29PM
FILE NAME: P:\16058 T-6 Prefabricated Aircraft Sun Shades\Drawings\MEP\Elec\E1.3.dwg

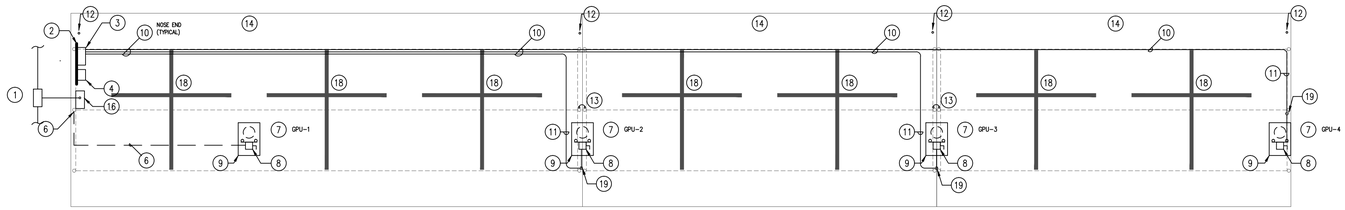

1 TYPICAL CANOPY - ROWS D-J (F-J BASE BID, ROWS E & D ALTERNATE

SCALE: 1" = 20'-0"

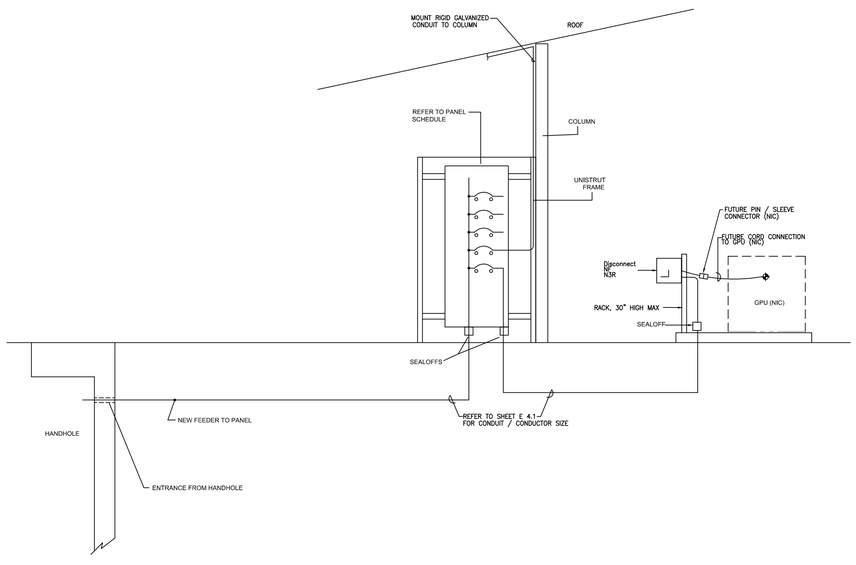

2 TYPICAL ROW PANEL DIAGRAM

SCALE: 1" = 20'-0"

GENERAL POWER NOTES:

(APPLIES TO ALL ELECTRICAL SHEETS)

1. POWER UNDERGROUND FROM MANHOLE TO MDP ON ROW F. ON OTHER ROWS, POWER FROM HANDHOLES OR MANHOLES TO ROW PANEL. REFER TO SITE PLAN AND ONE LINE DIAGRAM.
2. RACK. REFER TO DETAIL 1 ON SHEET 5.1.
3. ROW PANEL ON RACK. REFER TO DETAIL 1 ON SHEET 5.1 AND PANEL SCHEDULE.
4. LIGHTING CONTROL. REFER TO SHEET E3.1.
5. CIRCUIT TO GPU-1 FOR ROW, SUPPORTED IN STRUCTURE OVERHEAD.
6. DROP CONDUIT/CIRCUIT BELOW GRADE AND EXTEND TO GPU DISCONNECT.
7. GPU (NOT IN CONTRACT) BY OTHERS.
8. DISCONNECT ON RACK.
9. AREA FOR GPU, REFER TO CIVIL SHEETS FOR REQUIREMENTS.
10. EXTEND CIRCUITS OVERHEAD TO GPU-2, 3, & 4. SUPPORT FROM STRUCTURE.
11. DROP CIRCUIT TO DISCONNECT FOR GPU-2, 3, & 4. AT COLUMN.
12. GROUND ROD, CONNECT TO PANEL GROUND AND STEEL STRUCTURE.
13. INSTALL GROUND JUMPER CABLE BETWEEN CANOPY STEEL IF STEEL STRUCTURES ARE CONNECTING WITH STEEL INTERCONNECTIONS, JUMPERS CAN BE ELIMINATED.
14. REFER TO SHEET 3.1 FOR LIGHTING.
15. EXTEND CIRCUITS OVERHEAD TO GPU-2, & 3. SUPPORT FROM STRUCTURE.
16. MDP PANEL ON ROW F.
17. NOT USED
18. FOR GROUNDING RECEPTACLE, REFER TO SHEET E5.1 FOR DETAIL. REFER TO CIVIL DRAWINGS FOR LOCATIONS.
19. DROP ALONG COLUMN TO GRADE AND EXTEND TO DISCONNECT.

STATE OF TEXAS
DEAN T. ALDERSON
54441
LICENSED
PROFESSIONAL ENGINEER
11/17/14
Alderson & Associates, Inc.
F-1008

PROJECT # 16058

Alderson & Associates, Inc.
7700 Torino St, Suite 101
San Antonio, TX 78229
Telephone: 210.614.1110
©2016 Alderson & Associates, Inc.
F-1008

REVISIONS		
NO	DATE	DESCRIPTION

CITY OF DEL RIO, TEXAS
LAUGHLIN AIR FORCE BASE
T-6 PREFABRICATED AIRCRAFT SUN SHADES
TYPICAL CANOPY PLAN
POWER

JOB No: C-123922
DATE: 11/17/16
DRAWN BY: DTA
CHECKED BY: DTA
SHEET E2.1

PREPARED BY:
BAIN MEDINA BAIN, INC.
ENGINEERS & SURVEYORS
7073 San Pedro
San Antonio, Texas 78216
210/494-7223

PRINTED: 11/23/2016 @ 5:05PM
FILE NAME: P:\16058 T-6 Prefabricated Aircraft Sun Shades\Drawings\MEP\Elec\E2.1.dwg

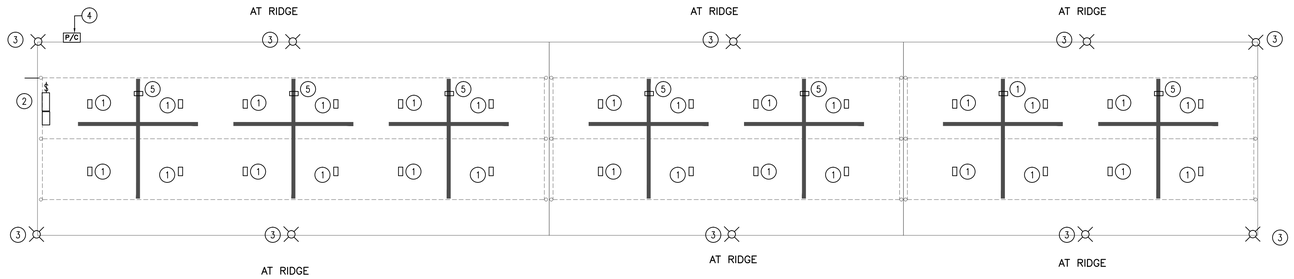

1 TYPICAL CANOPY - ROWS D-J LIGHTING

SCALE: 1" = 20'-0"

GENERAL LIGHTING NOTES:

(APPLIES TO ALL ELECTRICAL SHEETS)

1. TYPICAL LED FIXTURE SUPPORTED FROM STRUCTURE. CIRCUIT LIGHTS THROUGH ONE SWITCH MOUNTED AT LIGHTING CONTROL PANEL. MOUNT FLUSH TO PURLINS OR STRUCTURE. ALL CONDUIT TO BE MOUNTED TO STRUCTURE AND PAINTED TO MATCH STRUCTURE.
2. LIGHTING CONTROL PANEL, REFER TO DETAIL 3
3. OBSTRUCTION LIGHT ON TOP OF CANOPY , REFER TO DETAIL 4/E3.1. INSTALL AT CORNERS OF STRUCTURE AND AT ALL HIGH POINTS AS INDICATED. ALL FIXTURES TO BE AT SAME ELEVATION, 24" ABOVE HIGHEST LEVEL OF STRUCTURE.
4. PHOTO CELL.
5. TYPICAL LED FIXTURE "A", SUPPORTED FROM STRUCTURE. CIRCUIT LIGHT AT NOSE OF PLAN THROUGH PHOTOCELL. CIRCUIT OTHER LIGHTS THROUGH ONE SWITCH MOUNTED AT LIGHTING CONTROL PANEL. MOUNT FLUSH TO PURLINS OR STRUCTURE. ALL CONDUIT TO BE MOUNTED TO STRUCTURE AND PAINTED TO MATCH STRUCTURE.

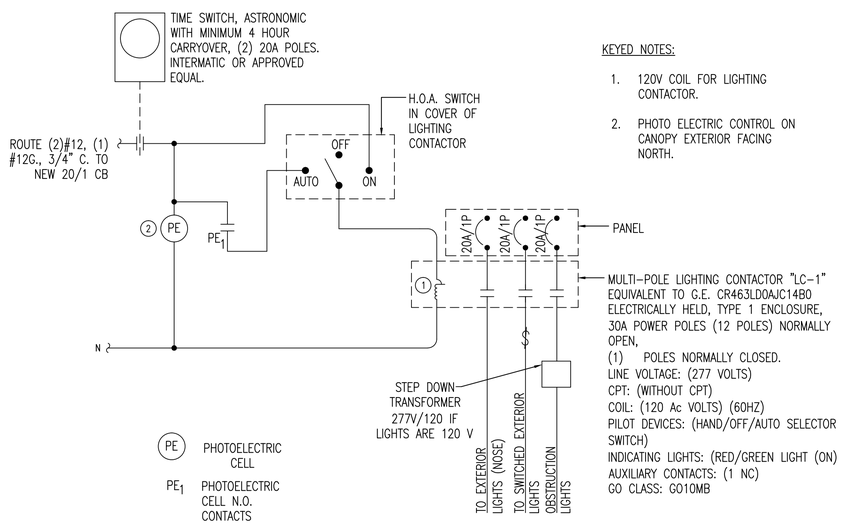

KEYED NOTES:

1. 120V COIL FOR LIGHTING CONTACTOR.
2. PHOTO ELECTRIC CONTROL ON CANOPY EXTERIOR FACING NORTH.

GENERAL LIGHTING PERFORMANCE REQUIREMENTS

1. LIGHTING FIXTURES SHALL BE LED, 277 V
2. FIXTURES SHOULD BE MOUNTED TO UNDERSIDE OF ROOF DECK.
3. FOOTCANDLE REQUIREMENTS – 35 F.C. AT 48" AFF
4. LIGHTING COMPONENTS SHALL BE RATED FOR 43° C TEMPERATURE.
5. LIGHTING SHALL BE SECURED TO WITH STAND WIND SPEED OF 110 MILES / HOUR.

2 LIGHTING CONTACTOR CONTROL CIRCUIT DETAIL

SCALE: NOT TO SCALE

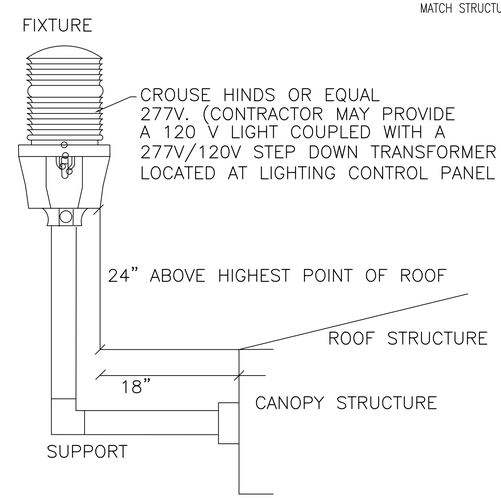

LUMINAIRE REQUIREMENTS

1. LUMINAIRE SHALL MEET FEDERAL AVIATION ADMINISTRATION SPECIFICATIONS FOR OBSTRUCTION LIGHTING (L-810). RED, NON FLASHING
2. CAST ALUMINUM HOUSING.
3. ONE PIECE 360° RED, HEAT RESISTANT GLASS FRESNEL GLOBE. PROVIDE TOGGLE TYPE LATCHES AND CLAMPING TO SECURE GLOBES. PROVIDE SAFETY CHAINS ON GLOBES.
4. MOUNT LUMINAIRE ON 1" RIGID STEEL CONDUIT. PROVIDE JUNCTION BOX AND MOUNTING PLATE AT BASE UNLESS INDICATED OTHERWISE. WINDLOAD EQUAL TO STRUCTURE
5. LAMPS SHALL BE LED.
6. PROVIDE INTERNAL PROVISIONS FOR GROUNDING.
7. COMPLY WITH UFC 3-535-01

3 OBSTRUCTION LIGHT

SCALE: NOT TO SCALE

STATE OF TEXAS
DEAN T. ALDERSON
54441
LICENSED
PROFESSIONAL ENGINEER
11/17/16
Alderson & Associates, Inc.
F-1008

PROJECT # 16058

Alderson & Associates, Inc.
7700 Torino St, Suite 101
San Antonio, TX 78229
Telephone: 210.614.1110
©2016 Alderson & Associates, Inc.
F-1008

REVISIONS		
NO	DATE	DESCRIPTION

CITY OF DEL RIO, TEXAS
LAUGHLIN AIR FORCE BASE
T-6 PREFABRICATED AIRCRAFT SUN SHADES

TYPICAL CANOPY PLAN LIGHTING

PREPARED BY:
BAIN MEDINA BAIN, INC.
ENGINEERS & SURVEYORS
7073 San Pedro
San Antonio, Texas 78216
210/494-7223

JOB No: C-1239.22
DATE: 11/17/16
DRAWN BY: DTA
CHECKED BY: DTA
SHEET E3.1

PRINTED: 11/23/2016 @ 10:00AM
FILE NAME: P:\16058 T-6 Prefabricated Aircraft Sun Shades\Drawings\MEP\Elec\E3.1.dwg

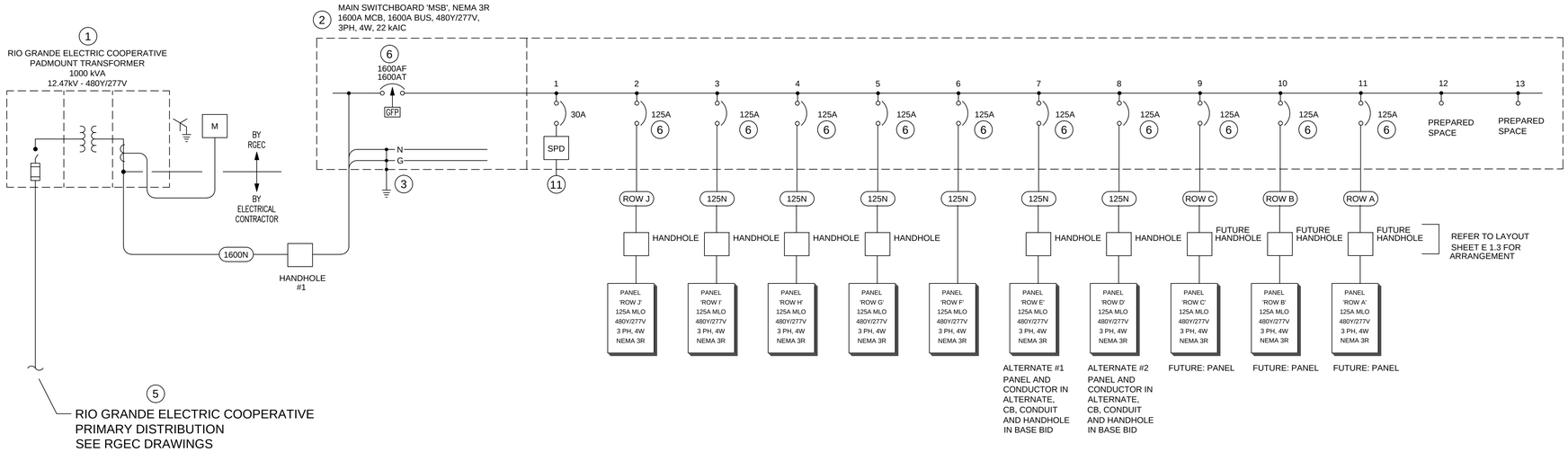

1 ONE-LINE ELECTRICAL DIAGRAM

SCALE: NOT TO SCALE

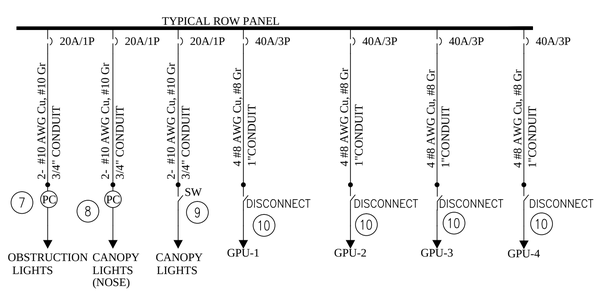

2 ONE-LINE ELECTRICAL DIAGRAM ROW PANEL

SCALE: NOT TO SCALE

KEYED NOTES:

(THIS SHEET ONLY)

1. NEW PADMOUNT TRANSFORMER BY RGEC. TRANSFORMER kVA AND NOMINAL IMPEDANCE RATINGS PROVIDED BY RGEC.
2. FURNISH & INSTALL A SERVICE RATED NEMA 3R SWITCHBOARD WITH GROUND FAULT PROTECTION (GFP) AND CIRCUIT BREAKERS SHOWN.
3. CONNECT SERVICE GROUND TO GROUNDING ELECTRODE AT EQUIPMENT PAD. SEE SHEET E-1.1 FOR GROUNDING
4. CONNECT TRANSFORMER SECONDARY NEUTRAL 'X0' TERMINAL TO GROUNDING ELECTRODE AT EQUIPMENT PAD.
5. SEE DRAWINGS BY RIO GRANDE ELECTRIC COOPERATIVE FOR DETAILS ON ELECTRIC PRIMARY DISTRIBUTION EQUIPMENT.
6. BREAKER FOR EACH ROW PANEL. PROVIDE BREAKERS FOR ALL 10 ROWS.
7. OBSTRUCTION LIGHTS THROUGH LIGHTING CONTACTOR/PHOTCELL. REFER TO DIAGRAM OF CONTROL
8. CANOPY LIGHT AT NOSE OF EACH AIRPLANE STATION THROUGH CONTACTOR/PHOTOCELL. REFER TO DIAGRAM OF CONTROL.
9. GENERAL CANOPY LIGHTS, WITH MANUAL SWITCH AND CONTACTOR/PHOTCELL. REFER TO DIAGRAM OF CONTROL.
10. 60 AMP/3P, N3R DISCONNECT SWITCH.
11. SURGE PROTECTION DEVICE.

FEEDER SCHEDULE

3 PHASE, 4 WIRE

TAG	CONDUIT		PHASE CONDUCTORS	NEUTRAL CONDUCTORS	GROUND CONDUCTORS
125 N	(1) 3"	ea. w/	(3)-#1	(1)-#1	(1)-#6
ROW J	(1) 3"	ea. w/	(3)-1/0	(1)-1/0	(1)-#6
ROW C	(1) 3"		PULL STRING	NONE	NONE
ROW B	(1) 3"		PULL STRING	NONE	NONE
ROW A	(1) 3"		PULL STRING	NONE	NONE
1600 N	(5) 4"	ea. w/	(3)-400kCM	(1)-400kCM	(1)-#250

NOTES:

1. CONDUIT SIZES ARE FOR EMT CONDUIT AND THHN, THWN INSULATED COPPER CONDUCTORS WITH MAXIMUM 40% FILL. CONTRACTOR SHALL ADJUST CONDUIT SIZE AS REQUIRED PER NEC APPENDIX C, CONDUIT FILL TABLES FOR ALL OTHER CONDUIT
2. REFER TO SPECIFICATIONS FOR ADDITIONAL CONDUIT APPLICATION AND INSTALLATION REQUIREMENTS.
3. PROVIDE LUGS AS REQUIRED FOR FEEDERS INDICATED

STATE OF TEXAS
DEAN T. ALDERSON
54441
LICENSED PROFESSIONAL ENGINEER
11/17/16
Alderson & Associates, Inc.
F-1008

PROJECT # 16058

Alderson & Associates, Inc.
7700 Torino St, Suite 101
San Antonio, TX 78229
Telephone: 210.614.1110
©2016 Alderson & Associates, Inc.
F-1008

REVISIONS		
NO	DATE	DESCRIPTION

CITY OF DEL RIO, TEXAS
LAUGHLIN AIR FORCE BASE
T-6 PREFABRICATED AIRCRAFT SUN SHADES
ONE LINE ELECTRICAL DIAGRAM

PREPARED BY:
BAIN MEDINA BAIN, INC.
ENGINEERS & SURVEYORS
7073 San Pedro
San Antonio, Texas 78216
210/494-7223

JOB No: C-12392.22
DATE: 11/17/16
DRAWN BY: DTA
CHECKED BY: DTA
SHEET E4.1

PRINTED: 11/23/2016 @ 10:32AM
FILE NAME: P:\16058 T-6 Prefabricated Aircraft Sun Shades\Drawings\MEP\Elec\E4.1.dwg

VOLTAGE DROP CALCULATIONS

Circuit Description	# Parallel Conductors	Conductor Type	Phase Type	Max Voltage Drop %	Voltage (V)	Full Load Amps (FLA)	One-way Length (L)	AWG Wire Size	Voltage Drop (VD)	Voltage Drop Percentage
Utility XFMR to MDP (10 Columns)	5	Copper	Three	5%	480	1247	210	400	14.63	0.61
MDP to CJ Panel	1	Copper	Three	3%	480	106	518	1/O	11.62	2.42
CJ Panel to CJ-DS1	1	Copper	Three	3%	480	26	105	8	3.69	0.77
CJ-DS1 TO GPU-J1	1	Copper	Three	3%	480	26	10	8	0.35	0.07
CJ Panel to CJ-DS2	1	Copper	Three	3%	480	26	205	8	7.21	1.50
CJ-DS2 TO GPU-J2	1	Copper	Three	3%	480	26	10	8	0.35	0.07
CJ Panel to CJ-DS3	1	Copper	Three	3%	480	26	310	8	10.91	2.27
CJ-DS3 TO GPU-J3	1	Copper	Three	3%	480	26	10	8	0.35	0.07
CJ Panel to CJ-DS4	1	Copper	Three	3%	480	26	395	8	13.90	2.90
CJ-DS4 TO GPU-J4	1	Copper	Three	3%	480	26	10	8	0.35	0.07
CJ Panel to SSJ LTGS	1	Copper	Single	3%	277	10.50	450	10	11.74	4.24
MDP to CI Panel	1	Copper	Three	3%	480	106	320	1	9.06	1.89
CI Panel to CI-DS1	1	Copper	Three	3%	480	26	105	8	3.69	0.77
CI-DS1 TO GPU-I1	1	Copper	Three	3%	480	26	10	8	0.35	0.07
CI Panel to CI-DS2	1	Copper	Three	3%	480	26	205	8	7.21	1.50
CI-DS2 TO GPU-I2	1	Copper	Three	3%	480	26	10	8	0.35	0.07
CI Panel to CI-DS3	1	Copper	Three	3%	480	26	310	8	10.91	2.27
CI-DS3 TO GPU-I3	1	Copper	Three	3%	480	26	10	8	0.35	0.07
CI Panel to CI-DS4	1	Copper	Three	3%	480	26	395	8	13.90	2.90
CI-DS4 TO GPU-I4	1	Copper	Three	3%	480	26	10	8	0.35	0.07
CI Panel to SSI LTGS	1	Copper	Single	3%	277	10.50	450	10	11.74	4.24
ABBREVIATIONS										
MDP : MAIN DISTRIBUTION PANEL										
CX = COLUMN X (TYP)										
GPU : GROUND POWER UNIT										
DS9 : DISCONNECT 9 (FOR GPU)										
SSX9 : SUNSHADE X 9 (TYP)										

VOLTAGE DROP CALCULATIONS

Circuit Description	# Parallel Conductors	Conductor Type	Phase Type	Max Voltage Drop %	Voltage (V)	Full Load Amps (FLA)	One-way Length (L)	AWG Wire Size	Voltage Drop (VD)	Voltage Drop Percentage
Utility XFMR to MDP (10 Columns)	5	Copper	Three	5%	480	1247	210	400	14.63	0.61
MDP to CH Panel	1	Copper	Three	3%	480	106	175	1	4.95	1.03
CH Panel to CH-DS1	1	Copper	Three	3%	480	26	105	8	3.69	0.77
CH-DS1 TO GPU-H1	1	Copper	Three	3%	480	26	10	8	0.35	0.07
CH Panel to CH-DS2	1	Copper	Three	3%	480	26	205	8	7.21	1.50
CH-DS2 TO GPU-H2	1	Copper	Three	3%	480	26	10	8	0.35	0.07
CH Panel to CH-DS3	1	Copper	Three	3%	480	26	310	8	10.91	2.27
CH-DS3 TO GPU-H3	1	Copper	Three	3%	480	26	10	8	0.35	0.07
CH Panel to CH-DS4	1	Copper	Three	3%	480	26	395	8	13.90	2.90
CH-DS4 TO GPU-H4	1	Copper	Three	3%	480	26	10	8	0.35	0.07
CH Panel to SSH LTGS	1	Copper	Single	3%	277	10.50	450	10	11.74	4.24
MDP to CG Panel	1	Copper	Three	3%	480	106	35	1	0.99	0.21
CG Panel to CG-DS1	1	Copper	Three	3%	480	26	105	8	3.69	0.77
CG-DS1 TO GPU-G1	1	Copper	Three	3%	480	26	10	8	0.35	0.07
CG Panel to CG-DS2	1	Copper	Three	3%	480	26	205	8	7.21	1.50
CG-DS2 TO GPU-G2	1	Copper	Three	3%	480	26	10	8	0.35	0.07
CG Panel to CG-DS3	1	Copper	Three	3%	480	26	310	8	10.91	2.27
CG-DS3 TO GPU-G3	1	Copper	Three	3%	480	26	10	8	0.35	0.07
CG Panel to CG-DS4	1	Copper	Three	3%	480	26	395	8	13.90	2.90
CG-DS4 TO GPU-G4	1	Copper	Three	3%	480	26	10	8	0.35	0.07
CG Panel to SSG LTGS	1	Copper	Single	3%	277	10.50	450	10	11.74	4.24
ABBREVIATIONS										
MDP : MAIN DISTRIBUTION PANEL										
CX = COLUMN X (TYP)										
GPU : GROUND POWER UNIT										
DS9 : DISCONNECT 9 (FOR GPU)										
SSX9 : SUNSHADE X 9 (TYP)										

VOLTAGE DROP CALCULATIONS

Circuit Description	# Parallel Conductors	Conductor Type	Phase Type	Max Voltage Drop %	Voltage (V)	Full Load Amps (FLA)	One-way Length (L)	AWG Wire Size	Voltage Drop (VD)	Voltage Drop Percentage
Utility XFMR to MDP (10 Columns)	5	Copper	Three	5%	480	1247	210	400	14.63	0.61
MDP to CF Panel	1	Copper	Three	3%	480	106	131	1	3.71	0.77
CF Panel to CF-DS1	1	Copper	Three	3%	480	26	105	8	3.69	0.77
CF-DS1 TO GPU-F1	1	Copper	Three	3%	480	26	10	8	0.35	0.07
CF Panel to CF-DS2	1	Copper	Three	3%	480	26	205	8	7.21	1.50
CF-DS2 TO GPU-F2	1	Copper	Three	3%	480	26	10	8	0.35	0.07
CF Panel to CF-DS3	1	Copper	Three	3%	480	26	310	8	10.91	2.27
CF-DS3 TO GPU-F3	1	Copper	Three	3%	480	26	10	8	0.35	0.07
CF Panel to CF-DS4	1	Copper	Three	3%	480	26	395	8	13.90	2.90
CF-DS4 TO GPU-F4	1	Copper	Three	3%	480	26	10	8	0.35	0.07
CF Panel to SSF LTGS	1	Copper	Single	3%	277	10.50	160	10	4.18	1.51
MDP to CE Panel	1	Copper	Three	3%	480	106	279	1	7.90	1.64
CE Panel to CE-DS1	1	Copper	Three	3%	480	26	105	8	3.69	0.77
CE-DS1 TO GPU-E1	1	Copper	Three	3%	480	26	10	8	0.35	0.07
CE Panel to CE-DS2	1	Copper	Three	3%	480	26	205	8	7.21	1.50
CE-DS2 TO GPU-E2	1	Copper	Three	3%	480	26	10	8	0.35	0.07
CE Panel to CE-DS3	1	Copper	Three	3%	480	26	310	8	10.91	2.27
CE-DS3 TO GPU-E3	1	Copper	Three	3%	480	26	10	8	0.35	0.07
CE Panel to CE-DS4	1	Copper	Three	3%	480	26	395	8	13.90	2.90
CE-DS4 TO GPU-E4	1	Copper	Three	3%	480	26	10	8	0.35	0.07
CE Panel to SSE LTGS	1	Copper	Single	3%	277	10.50	160	10	4.18	1.51
ABBREVIATIONS										
MDP : MAIN DISTRIBUTION PANEL										
CX = COLUMN X (TYP)										
GPU : GROUND POWER UNIT										
DS9 : DISCONNECT 9 (FOR GPU)										
SSX9 : SUNSHADE X 9 (TYP)										

VOLTAGE DROP CALCULATIONS

Circuit Description	# Parallel Conductors	Conductor Type	Phase Type	Max Voltage Drop %	Voltage (V)	Full Load Amps (FLA)	One-way Length (L)	AWG Wire Size	Voltage Drop (VD)	Voltage Drop Percentage
Utility XFMR to MDP (10 Columns)	5	Copper	Three	5%	480	1247	210	400	14.63	0.61
MDP to CD Panel	1	Copper	Three	3%	480	106	427	1	12.08	2.52
CD Panel to CD-DS1	1	Copper	Three	3%	480	26	105	8	3.69	0.77
CD-DS1 TO GPU-D1	1	Copper	Three	3%	480	26	10	8	0.35	0.07
CD Panel to CD-DS2	1	Copper	Three	3%	480	26	205	8	7.21	1.50
CD-DS2 TO GPU-D2	1	Copper	Three	3%	480	26	10	8	0.35	0.07
CD Panel to CD-DS3	1	Copper	Three	3%	480	26	310	8	10.91	2.27
CD-DS3 TO GPU-D3	1	Copper	Three	3%	480	26	10	8	0.35	0.07
CD Panel to CD-DS4	1	Copper	Three	3%	480	26	395	8	13.90	2.90
CD-DS4 TO GPU-D4	1	Copper	Three	3%	480	26	10	8	0.35	0.07
CD Panel to SSD LTGS	1	Copper	Single	3%	277	10.50	160	10	4.18	1.51
MDP to CC Panel	1	Copper	Three	3%	480	106	578	1/O	12.96	2.70
CC Panel to CC-DS1	1	Copper	Three	3%	480	26	205	8	7.21	1.50
CC-DS1 TO GPU-C1	1	Copper	Three	3%	480	26	10	8	0.35	0.07
CC Panel to CC-DS2	1	Copper	Three	3%	480	26	305	8	10.73	2.24
CC-DS2 TO GPU-C2	1	Copper	Three	3%	480	26	10	8	0.35	0.07
CC Panel to CC-DS3	1	Copper	Three	3%	480	26	410	8	14.43	3.01
CC-DS3 TO GPU-C3	1	Copper	Three	3%	480	26	10	8	0.35	0.07
CC Panel to SSC LTGS	1	Copper	Single	3%	277	6.00	305	10	4.55	1.64
ABBREVIATIONS										
MDP : MAIN DISTRIBUTION PANEL										
CX = COLUMN X (TYP)										
GPU : GROUND POWER UNIT										
DS9 : DISCONNECT 9 (FOR GPU)										
SSX9 : SUNSHADE X 9 (TYP)										

VOLTAGE DROP CALCULATIONS

Circuit Description	# Parallel Conductors	Conductor Type	Phase Type	Max Voltage Drop %	Voltage (V)	Full Load Amps (FLA)	One-way Length (L)	AWG Wire Size	Voltage Drop (VD)	Voltage Drop Percentage
Utility XFMR to MDP (10 Columns)	5	Copper	Three	5%	480	1247	210	400	14.63	0.61
MDP to CB Panel	1	Copper	Three	3%	480	106	729	2/O	12.97	2.70
CB Panel to CB-DS1	1	Copper	Three	3%	480	26	205	8	7.21	1.50
CB-DS1 TO GPU-B1	1	Copper	Three	3%	480	26	10	8	0.35	0.07
CB Panel to CB-DS2	1	Copper	Three	3%	480	26	305	8	10.73	2.24
CB-DS2 TO GPU-B2	1	Copper	Three	3%	480	26	10	8	0.35	0.07
CB Panel to CB-DS3	1	Copper	Three	3%	480	26	410	8	14.43	3.01
CB-DS3 TO GPU-B3	1	Copper	Three	3%	480	26	10	8	0.35	0.07
CB Panel to SSB LTGS	1	Copper	Single	3%	277	6.00	305	10	4.55	1.64
MDP to CA Panel	1	Copper	Three	3%	480	106	877	3/O	12.38	2.58
CA Panel to CA-DS1	1	Copper	Three	3%	480	26	105	8	3.69	0.77
CA-DS1 TO GPU-A1	1	Copper	Three	3%	480	26	10	8	0.35	0.07
CA Panel to CA-DS2	1	Copper	Three	3%	480	26	205	8	7.21	1.50
CA-DS2 TO GPU-A2	1	Copper	Three	3%	480	26	10	8	0.35	0.07
CA Panel to CA-DS3	1	Copper	Three	3%	480	26	310	8	10.91	2.27
CA-DS3 TO GPU-A3	1	Copper	Three	3%	480	26	10	8	0.35	0.07
CA Panel to CA-DS4	1	Copper	Three	3%	480	26	395	8	13.90	2.90
CA-DS4 TO GPU-A4	1	Copper	Three	3%	480	26	10	8	0.35	0.07
CA Panel to SSA LTGS	1	Copper	Single	3%	277	10.50	160	10	4.18	1.51
ABBREVIATIONS										
MDP : MAIN DISTRIBUTION PANEL										
CX = COLUMN X (TYP)										
GPU : GROUND POWER UNIT										
DS9 : DISCONNECT 9 (FOR GPU)										
SSX9 : SUNSHADE X 9 (TYP)										

STATE OF TEXAS
DEAN T. ALDERSON
54441
LICENSED
PROFESSIONAL ENGINEER
11/17/16
Alderson & Associates, Inc.
F-1008

PROJECT # 16058

Alderson & Associates, Inc.
7700 Torino St, Suite 101
San Antonio, TX 78229
Telephone: 210.614.1110

©2016 Alderson & Associates, Inc.
F-1008

REVISIONS		
NO	DATE	DESCRIPTION

CITY OF DEL RIO, TEXAS
LAUGHLIN AIR FORCE BASE
T-6 PREFABRICATED AIRCRAFT SUN SHADES

ELECTRICAL SCHEDULES

JOB No: C-123922
DATE: 11/17/16
DRAWN BY: DTA
CHECKED BY: DTA
SHEET E4.2

PREPARED BY:
BAIN MEDINA BAIN, INC.
ENGINEERS & SURVEYORS
7073 San Pedro
San Antonio, Texas 78216
210/494-7223

PRINTED: 11/23/2016 @ 10:38AM
FILE NAME: P:\16058 T-6 Prefabricated Aircraft Sun Shades\Drawings\MEP\Elec\E4.2.dwg

PANEL: MDP

VOLTAGE: 480Y/277V, 3Ø, 4W
FED FROM: UTILITY TRANSFORMER
FED BY: 5SETS:(4) 400KCMIL, (1) #4/O GND, 4"C
AVAILABLE FAULT CURRENT: 1.234 KA
PANEL MOUNTING: OTHER

MAIN TYPE: MAIN CIRCUIT BREAKER
MAIN AMPS: 1600A
BUS RATING: 1600A
AIC RATING: 22,000
NEMA TYPE: NEMA 3R

CIRCUIT NUMBER	DESCRIPTION	LOAD TYPE	PHASE LOAD VA	VA	VA	# OF POLES	BKR AMPS	WIRE SIZE	CONDUIT SIZE	A	B	C	CONDUIT SIZE	WIRE SIZE	BKR AMPS	# OF POLES	PHASE LOAD VA	VA	VA	LOAD TYPE	DESCRIPTION	CIRCUIT NUMBER
		E	29,660			3	125	1/O	2"				2"	1	125	3	29,660			E		
1	J PANEL	E		29,660		"	"	"	"				"	"	"	"		29,660		E	F PANEL	2
		E			29,220	"	"	"	"				"	"	"	"			29,220	E		
		E	29,660			3	125	1	2"				2"	1	125	3	29,660			E		
3	I PANEL	E		29,660		"	"	"	"				"	"	"	"		29,660		E	E PANEL	4
		E			29,220	"	"	"	"				"	"	"	"			29,220	E		
		E	29,660			3	125	1	2"				2"	1	125	3	29,660			E		
5	H PANEL	E		29,660		"	"	"	"				"	"	"	"		29,660		E	D PANEL	6
		E			29,220	"	"	"	"				"	"	"	"			29,220	E		
		E	29,660			3	125	1	2"				2"	2/O	125	3	22,045			E		
9	G PANEL	E		29,660		"	"	"	"				"	"	"	"		22,045		E	B PANEL	8
		E			29,220	"	"	"	"				"	"	"	"			22,015	E		
		E	22,045			3	125	1/O	2"				2 1/2"	3/O	125	3	29,660			E		
11	C PANEL	E		22,045		"	"	"	"				"	"	"	"		29,660		E	A PANEL	12
		E			22,015	"	"	"	"				"	"	"	"			29,220	E		
	SPACE																				SPACE	
	SPACE																				SPACE	
	SPACE																				SPACE	
	SPACE																				SPACE	
	SPACE																				SPACE	
	SPACE																				SPACE	

PHASE	A	B	C
VA	140,685	140,685	138,895
AMPS	507.89	507.89	501.43
PHASE BALANCE %	33.48%	33.48%	33.05%

A	B	C	PHASE
140,685	140,685	138,895	VA
507.89	507.89	501.43	AMPS
33.48%	33.48%	33.05%	PHASE BALANCE %

LEGEND

LOAD TYPE

* = GFCI RCPT OR BREAKER
** = AFCI CIRCUIT BREAKER
L = LIGHTING
R = RECEPTACLES
E = ELECTRICAL EQUIPMENT
MT = ELEC MOTOR LOAD(S)
LMT = LARGEST MOTOR LOAD
H = ELECTRIC HEATING ONLY
M = MECHANICAL
P = PLUMBING

PHASE A BALANCE	281,370 VA	1,015.78 AMPS	33.5% OF LOAD
PHASE B BALANCE	281,370 VA	1,015.78 AMPS	33.5% OF LOAD
PHASE C BALANCE	277,790 VA	1,002.85 AMPS	33.0% OF LOAD

TOTAL CONNECTED VA	**840,530**
AMPS	**1,011.47**

ABBREVIATION DESCRIPTION

CB=CIRCUIT BREAKER	HP=HORSEPOWER	RCPT(S)=RECEPTACLE(S)
CKT=CIRCUIT	LTG=LIGHTING	SEC=SECURITY
CTRL=CONTROL	MTR=MOTOR	STD=STANDARD
FA=FIRE ALARM	PNL=PANEL	XFMR / XT=TRANSFORMER
FU=FUSE	PWR=POWER	GFCI-GROUND FAULT CIRCUIT INTERUPTOR

NOTES:
(1) FOR WIRE AND CONDUIT ADDITIONAL LOAD INFORMATION, REFER ONE-LINE DIAGRAM & FEEDER SCHEDULE.
(2) CONDUIT SIZES ACCOUNT FOR ALL CONDUCTORS AND GROUND WIRE FOR CIRCUIT.
(3)
(4)

PANEL: J PANEL
PANEL CIRCUITS: 42
LOCATION: COLUMN J

VOLTAGE: 480Y/277V, 3Ø, 4W
FED FROM: MDP
FED BY: (4) 1/O, #6G CU, 3"C

MAIN TYPE: MAIN LUG ONLY
MAIN AMPS:
BUS RATING: 125A
AIC RATING: 10,000
NEMA TYPE: NEMA 3R

PANEL MOUNTING: STRUT RACK

CIRCUIT NUMBER	DESCRIPTION	LOAD TYPE	PHASE LOAD VA	VA	VA	# OF POLES	BKR AMPS	WIRE SIZE	CONDUIT SIZE	A	B	C	CONDUIT SIZE	WIRE SIZE	BKR AMPS	# OF POLES	PHASE LOAD VA	VA	VA	LOAD TYPE	DESCRIPTION	CIRCUIT NUMBER
1	DS1 (GPU-J1)	E	7,205			3	40	8	1"				1"	8	40	3	7,205			E	DS3 (GPU-J3)	2
3	"	E		7,205		"	"	"	"				"	"	"	"		7,205		E	"	4
5	"	E			7,205	"	"	"	"				"	"	"	"			7,205	E	"	6
7	DS2 (GPU-J2)	E	7,205			3	40	8	1"				1"	8	40	3	7,205			E	DS4 (GPU-J4)	8
9	"	E		7,205		"	"	"	"				"	"	"	"		7,205		E	"	10
11	"	E			7,205	"	"	"	"				"	"	"	"			7,205	E	"	12
13	LTGS SS J	L	840			1	20	10	3/4"						20	1					SPARE	14
15	LTGS SS J	L		840		1	20	10	3/4"						20	1					SPARE	16
17	LTGS SS J OBSERVE	L			400	1	20	10	3/4"						20	1					SPARE	18
19	SPARE					3	25								20	1					SPARE	20
21	SPARE					"	"								20	1					SPARE	22
23	SPARE					"	"								20	1					SPARE	24
25	SPARE					1	20								20	1					SPARE	26
27	SPARE					1	20								20	1					SPARE	28
29	SPARE					1	20								20	1					SPARE	30
31	SPACE																				SPACE	32
33	SPACE																				SPACE	34
35	SPACE																				SPACE	36
37	SPACE																				SPACE	38
39	SPACE																				SPACE	40
41	SPACE																				SPACE	42

PHASE	A	B	C
VA	15,250	15,250	14,810
AMPS	55.05	55.05	53.47
PHASE BALANCE %	33.66%	33.66%	32.69%

A	B	C	PHASE
14,410	14,410	14,410	VA
52.02	52.02	52.02	AMPS
33.33%	33.33%	33.33%	PHASE BALANCE %

LEGEND

LOAD TYPE

* = GFCI RCPT OR BREAKER
** = AFCI CIRCUIT BREAKER
L = LIGHTING
R = RECEPTACLES
E = ELECTRICAL EQUIPMENT
MT = ELEC MOTOR LOAD(S)
LMT = LARGEST MOTOR LOAD
H = ELECTRIC HEATING ONLY
M = MECHANICAL
P = PLUMBING

PHASE A BALANCE	29,660 VA	107.08 AMPS	33.5% OF LOAD
PHASE B BALANCE	29,660 VA	107.08 AMPS	33.5% OF LOAD
PHASE C BALANCE	29,220 VA	105.49 AMPS	33.0% OF LOAD

CONNECTED LOAD VA	**88,540**
CONNECTED LOAD AMPS	**106.49**
CORRECTED LOAD AMPS	**74.55**

ABBREVIATION DESCRIPTION

CB=CIRCUIT BREAKER	HP=HORSEPOWER	RCPT(S)=RECEPTACLE(S)
CKT=CIRCUIT	LTG=LIGHTING	SEC=SECURITY
CTRL=CONTROL	MTR=MOTOR	STD=STANDARD
FA=FIRE ALARM	PNL=PANEL	XFMR / XT=TRANSFORMER
FU=FUSE	PWR=POWER	GFCI-GROUND FAULT CIRCUIT INTERUPTOR

NOTES:
(1) FOR WIRE AND CONDUIT ADDITIONAL LOAD INFORMATION, REFER ONE-LINE DIAGRAM & FEEDER SCHEDULE.
(2) CONDUIT SIZES ACCOUNT FOR ALL CONDUCTORS AND GROUND WIRE FOR CIRCUIT.
(3)
(4)

PANEL: I PANEL
PANEL CIRCUITS: 42
LOCATION: COLUMN I

VOLTAGE: 480Y/277V, 3Ø, 4W
FED FROM: MDP
FED BY: (4) #1, #6G CU, 3"C

MAIN TYPE: MAIN LUG ONLY
MAIN AMPS:
BUS RATING: 125A
AIC RATING: 10,000
NEMA TYPE: NEMA 3R

PANEL MOUNTING: STRUT RACK

CIRCUIT NUMBER	DESCRIPTION	LOAD TYPE	PHASE LOAD VA	VA	VA	# OF POLES	BKR AMPS	WIRE SIZE	CONDUIT SIZE	A	B	C	CONDUIT SIZE	WIRE SIZE	BKR AMPS	# OF POLES	PHASE LOAD VA	VA	VA	LOAD TYPE	DESCRIPTION	CIRCUIT NUMBER
1	DS1 (GPU-I1)	E	7,205			3	40	8	1"				1"	8	40	3	7,205			E	DS3 (GPU-I3)	2
3	"	E		7,205		"	"	"	"				"	"	"	"		7,205		E	"	4
5	"	E			7,205	"	"	"	"				"	"	"	"			7,205	E	"	6
7	DS2 (GPU-I2)	E	7,205			3	40	8	1"				1"	8	40	3	7,205			E	DS4 (GPU-I4)	8
9	"	E		7,205		"	"	"	"				"	"	"	"		7,205		E	"	10
11	"	E			7,205	"	"	"	"				"	"	"	"			7,205	E	"	12
13	LTGS SS I	L	840			1	20	10	3/4"						20	1					SPARE	14
15	LTGS SS I	L		840		1	20	10	3/4"						20	1					SPARE	16
17	LTGS SS I OBSERVE	L			400	1	20	10	3/4"						20	1					SPARE	18
19	SPARE					3	25								20	1					SPARE	20
21	SPARE					"	"								20	1					SPARE	22
23	SPARE					"	"								20	1					SPARE	24
25	SPARE					1	20								20	1					SPARE	26
27	SPARE					1	20								20	1					SPARE	28
29	SPARE					1	20								20	1					SPARE	30
31	SPACE																				SPACE	32
33	SPACE																				SPACE	34
35	SPACE																				SPACE	36
37	SPACE																				SPACE	38
39	SPACE																				SPACE	40
41	SPACE																				SPACE	42

PHASE	A	B	C
VA	15,250	15,250	14,810
AMPS	55.05	55.05	53.47
PHASE BALANCE %	33.66%	33.66%	32.69%

A	B	C	PHASE
14,410	14,410	14,410	VA
52.02	52.02	52.02	AMPS
33.33%	33.33%	33.33%	PHASE BALANCE %

LEGEND

LOAD TYPE

* = GFCI RCPT OR BREAKER
** = AFCI CIRCUIT BREAKER
L = LIGHTING
R = RECEPTACLES
E = ELECTRICAL EQUIPMENT
MT = ELEC MOTOR LOAD(S)
LMT = LARGEST MOTOR LOAD
H = ELECTRIC HEATING ONLY
M = MECHANICAL
P = PLUMBING

PHASE A BALANCE	29,660 VA	107.08 AMPS	33.5% OF LOAD
PHASE B BALANCE	29,660 VA	107.08 AMPS	33.5% OF LOAD
PHASE C BALANCE	29,220 VA	105.49 AMPS	33.0% OF LOAD

CONNECTED LOAD VA	**88,540**
CONNECTED LOAD AMPS	**106.49**
CORRECTED LOAD AMPS	**74.55**

ABBREVIATION DESCRIPTION

CB=CIRCUIT BREAKER	HP=HORSEPOWER	RCPT(S)=RECEPTACLE(S)
CKT=CIRCUIT	LTG=LIGHTING	SEC=SECURITY
CTRL=CONTROL	MTR=MOTOR	STD=STANDARD
FA=FIRE ALARM	PNL=PANEL	XFMR / XT=TRANSFORMER
FU=FUSE	PWR=POWER	GFCI-GROUND FAULT CIRCUIT INTERUPTOR

NOTES:
(1) FOR WIRE AND CONDUIT ADDITIONAL LOAD INFORMATION, REFER ONE-LINE DIAGRAM & FEEDER SCHEDULE.
(2) CONDUIT SIZES ACCOUNT FOR ALL CONDUCTORS AND GROUND WIRE FOR CIRCUIT.
(3)
(4)

PANEL: H PANEL
PANEL CIRCUITS: 42
LOCATION: COLUMN H

VOLTAGE: 480Y/277V, 3Ø, 4W
FED FROM: MDP
FED BY: (4) #1, #6G CU, 3"C

MAIN TYPE: MAIN LUG ONLY
MAIN AMPS:
BUS RATING: 125A
AIC RATING: 10,000
NEMA TYPE: NEMA 3R

PANEL MOUNTING: STRUT RACK

CIRCUIT NUMBER	DESCRIPTION	LOAD TYPE	PHASE LOAD VA	VA	VA	# OF POLES	BKR AMPS	WIRE SIZE	CONDUIT SIZE	A	B	C	CONDUIT SIZE	WIRE SIZE	BKR AMPS	# OF POLES	PHASE LOAD VA	VA	VA	LOAD TYPE	DESCRIPTION	CIRCUIT NUMBER
1	DS1 (GPU-H1)	E	7,205			3	40	8	1"				1"	8	40	3	7,205			E	DS3 (GPU-H3)	2
3	"	E		7,205		"	"	"	"				"	"	"	"		7,205		E	"	4
5	"	E			7,205	"	"	"	"				"	"	"	"			7,205	E	"	6
7	DS2 (GPU-H2)	E	7,205			3	40	8	1"				1"	8	40	3	7,205			E	DS4 (GPU-H4)	8
9	"	E		7,205		"	"	"	"				"	"	"	"		7,205		E	"	10
11	"	E			7,205	"	"	"	"				"	"	"	"			7,205	E	"	12
13	LTGS SS H	L	840			1	20	10	3/4"						20	1					SPARE	14
15	LTGS SS H	L		840		1	20	10	3/4"						20	1					SPARE	16
17	LTGS SS H OBSERVE	L			400	1	20	10	3/4"						20	1					SPARE	18
19	SPARE					3	25								20	1					SPARE	20
21	SPARE					"	"								20	1					SPARE	22
23	SPARE					"	"								20	1					SPARE	24
25	SPARE					1	20								20	1					SPARE	26
27	SPARE					1	20								20	1					SPARE	28
29	SPARE					1	20								20	1					SPARE	30
31	SPACE																				SPACE	32
33	SPACE																				SPACE	34
35	SPACE																				SPACE	36
37	SPACE																				SPACE	38
39	SPACE																				SPACE	40
41	SPACE																				SPACE	42

PHASE	A	B	C
VA	15,250	15,250	14,810
AMPS	55.05	55.05	53.47
PHASE BALANCE %	33.66%	33.66%	32.69%

A	B	C	PHASE
14,410	14,410	14,410	VA
52.02	52.02	52.02	AMPS
33.33%	33.33%	33.33%	PHASE BALANCE %

LEGEND

LOAD TYPE

* = GFCI RCPT OR BREAKER
** = AFCI CIRCUIT BREAKER
L = LIGHTING
R = RECEPTACLES
E = ELECTRICAL EQUIPMENT
MT = ELEC MOTOR LOAD(S)
LMT = LARGEST MOTOR LOAD
H = ELECTRIC HEATING ONLY
M = MECHANICAL
P = PLUMBING

PHASE A BALANCE	29,660 VA	107.08 AMPS	33.5% OF LOAD
PHASE B BALANCE	29,660 VA	107.08 AMPS	33.5% OF LOAD
PHASE C BALANCE	29,220 VA	105.49 AMPS	33.0% OF LOAD

CONNECTED LOAD VA	**88,540**
CONNECTED LOAD AMPS	**106.49**
CORRECTED LOAD AMPS	**74.55**

ABBREVIATION DESCRIPTION

CB=CIRCUIT BREAKER	HP=HORSEPOWER	RCPT(S)=RECEPTACLE(S)
CKT=CIRCUIT	LTG=LIGHTING	SEC=SECURITY

NOTES:
(1) FOR WIRE AND CONDUIT ADDITIONAL LOAD INFORMATION, REFER ONE-LINE DIAGRAM & FEEDER SCHEDULE.
(2) CONDUIT SIZES ACCOUNT FOR ALL CONDUCTORS AND GROUND WIRE FOR CIRCUIT.

STATE OF TEXAS
DEAN T. ALDERSON
54441
LICENSED
PROFESSIONAL ENGINEER
11/17/16
Alderson & Associates, Inc.
F-1008

PROJECT # 16058

Alderson & Associates, Inc.
7700 Torino St, Suite 101
San Antonio, TX 78229
Telephone: 210.614.1110
©2016 Alderson & Associates, Inc.
F-1008

REVISIONS		
NO	DATE	DESCRIPTION

CITY OF DEL RIO, TEXAS
LAUGHLIN AIR FORCE BASE
T-6 PREFABRICATED AIRCRAFT SUN SHADES

ELECTRICAL SCHEDULES

PREPARED BY:
BAIN MEDINA BAIN, INC.
ENGINEERS & SURVEYORS
7073 San Pedro
San Antonio, Texas 78216
210/494-7223

JOB No: C-1239.22
DATE: 11/17/16
DRAWN BY: DTA
CHECKED BY: DTA
SHEET E4.3

PRINTED: 11/23/2016 @ 11:25AM
FILE NAME: P:\16058 T-6 Prefabricated Aircraft Sun Shades\Drawings\MEP\Elec\E4.3.dwg

PANEL: G PANEL
PANEL CIRCUITS: 42
LOCATION: COLUMN G

VOLTAGE: 480Y/277V, 3Ø, 4W
FED FROM: MDP
FED BY: (4) #1, #6G CU, 3"C

MAIN TYPE: MAIN LUG ONLY
MAIN AMPS:
BUS RATING: 125A
AIC RATING: 10,000
NEMA TYPE: NEMA 3R

PANEL MOUNTING: STRUT RACK

CIRCUIT NUMBER	DESCRIPTION	LOAD TYPE	PHASE LOAD VA	PHASE LOAD VA	PHASE LOAD VA	# OF POLES	BKR AMPS	WIRE SIZE	CONDUIT SIZE	A	B	C	CONDUIT SIZE	WIRE SIZE	BKR AMPS	# OF POLES	PHASE LOAD VA	PHASE LOAD VA	PHASE LOAD VA	LOAD TYPE	DESCRIPTION	CIRCUIT NUMBER
1	DS1 (GPU-G1)	E	7,205			3	40	8	1"	●			1"	8	40	3	7,205			E	DS3 (GPU-G3)	2
3	"	E		7,205		"	"	"	"		●		"	"	"	"		7,205		E	"	4
5	"	E			7,205	"	"	"	"			●	"	"	"	"			7,205	E	"	6
7	DS2 (GPU-G2)	E	7,205			3	40	8	1"	●			1"	8	40	3	7,205			E	DS4 (GPU-G4)	8
9	"	E		7,205		"	"	"	"		●		"	"	"	"		7,205		E	"	10
11	"	E			7,205	"	"	"	"			●	"	"	"	"			7,205	E	"	12
13	LTGS SS G1	L	840			1	20	10	3/4"	●					20	1					SPARE	14
15	LTGS SS G1	L		840		1	20	10	3/4"		●				20	1					SPARE	16
17	LTGS SS G1 OBSERVE	L			400	1	20	10	3/4"			●			20	1					SPARE	18
19	SPARE					3	25			●					20	1					SPARE	20
21	SPARE					"	"				●				20	1					SPARE	22
23	SPARE					"	"					●			20	1					SPARE	24
25	SPARE					1	20			●					20	1					SPARE	26
27	SPARE					1	20				●				20	1					SPARE	28
29	SPARE					1	20					●			20	1					SPARE	30
31	SPACE									●											SPACE	32
33	SPACE										●										SPACE	34
35	SPACE											●									SPACE	36
37	SPACE									●											SPACE	38
39	SPACE										●										SPACE	40
41	SPACE											●									SPACE	42

PHASE	A	B	C
VA	15,250	15,250	14,810
AMPS	55.05	55.05	53.47
PHASE BALANCE %	33.66%	33.66%	32.69%

A	B	C	PHASE
14,410	14,410	14,410	VA
52.02	52.02	52.02	AMPS
33.33%	33.33%	33.33%	PHASE BALANCE %

LEGEND

LOAD TYPE

* = GFCI RCPT OR BREAKER
** = AFCI CIRCUIT BREAKER
L = LIGHTING
R = RECEPTACLES
E = ELECTRICAL EQUIPMENT
MT = ELEC MOTOR LOAD(S)
LMT = LARGEST MOTOR LOAD
H = ELECTRIC HEATING ONLY
M = MECHANICAL
P = PLUMBING

PHASE A BALANCE	29,660 VA	107.08 AMPS	33.5% OF LOAD
PHASE B BALANCE	29,660 VA	107.08 AMPS	33.5% OF LOAD
PHASE C BALANCE	29,220 VA	105.49 AMPS	33.0% OF LOAD

CONNECTED LOAD VA	**88,540**
CONNECTED LOAD AMPS	**106.49**
CORRECTED LOAD AMPS	**74.55**

ABBREVIATION DESCRIPTION

CB=CIRCUIT BREAKER	HP=HORSEPOWER	RCPT(S)=RECEPTACLE(S)
CKT=CIRCUIT	LTG=LIGHTING	SEC=SECURITY
CTRL=CONTROL	MTR=MOTOR	STD=STANDARD
FA=FIRE ALARM	PNL=PANEL	XFMR / XT=TRANSFORMER
FU=FUSE	PWR=POWER	GFCI-GROUND FAULT CIRCUIT INTERUPTOR

NOTES:
(1) FOR WIRE AND CONDUIT ADDITIONAL LOAD INFORMATION, REFER ONE-LINE DIAGRAM & FEEDER SCHEDULE.
(2) CONDUIT SIZES ACCOUNT FOR ALL CONDUCTORS AND GROUND WIRE FOR CIRCUIT.
(3)
(4)

PANEL: F PANEL
PANEL CIRCUITS: 42
LOCATION: COLUMN F

VOLTAGE: 480Y/277V, 3Ø, 4W
FED FROM: MDP
FED BY: (4) #1, #6G CU, 3"C

MAIN TYPE: MAIN LUG ONLY
MAIN AMPS:
BUS RATING: 125A
AIC RATING: 10,000
NEMA TYPE: NEMA 3R

PANEL MOUNTING: STRUT RACK

CIRCUIT NUMBER	DESCRIPTION	LOAD TYPE	PHASE LOAD VA	PHASE LOAD VA	PHASE LOAD VA	# OF POLES	BKR AMPS	WIRE SIZE	CONDUIT SIZE	A	B	C	CONDUIT SIZE	WIRE SIZE	BKR AMPS	# OF POLES	PHASE LOAD VA	PHASE LOAD VA	PHASE LOAD VA	LOAD TYPE	DESCRIPTION	CIRCUIT NUMBER
1	DS1 (GPU-F1)	E	7,205			3	40	8	1"	●			1"	8	40	3	7,205			E	DS3 (GPU-F3)	2
3	"	E		7,205		"	"	"	"		●		"	"	"	"		7,205		E	"	4
5	"	E			7,205	"	"	"	"			●	"	"	"	"			7,205	E	"	6
7	DS2 (GPU-F2)	E	7,205			3	40	8	1"	●			1"	8	40	3	7,205			E	DS4 (GPU-F4)	8
9	"	E		7,205		"	"	"	"		●		"	"	"	"		7,205		E	"	10
11	"	E			7,205	"	"	"	"			●	"	"	"	"			7,205	E	"	12
13	LTGS SS F	L	840			1	20	10	3/4"	●					20	1					SPARE	14
15	LTGS SS F	L		840		1	20	10	3/4"		●				20	1					SPARE	16
17	LTGS SS F OBSERVE	L			400	1	20	10	3/4"			●			20	1					SPARE	18
19	SPARE					3	25			●					20	1					SPARE	20
21	SPARE					"	"				●				20	1					SPARE	22
23	SPARE					"	"					●			20	1					SPARE	24
25	SPARE					1	20			●					20	1					SPARE	26
27	SPARE					1	20				●				20	1					SPARE	28
29	SPARE					1	20					●			20	1					SPARE	30
31	SPACE									●											SPACE	32
33	SPACE										●										SPACE	34
35	SPACE											●									SPACE	36
37	SPACE									●											SPACE	38
39	SPACE										●										SPACE	40
41	SPACE											●									SPACE	42

PHASE	A	B	C
VA	15,250	15,250	14,810
AMPS	55.05	55.05	53.47
PHASE BALANCE %	33.66%	33.66%	32.69%

A	B	C	PHASE
14,410	14,410	14,410	VA
52.02	52.02	52.02	AMPS
33.33%	33.33%	33.33%	PHASE BALANCE %

LEGEND

LOAD TYPE

* = GFCI RCPT OR BREAKER
** = AFCI CIRCUIT BREAKER
L = LIGHTING
R = RECEPTACLES
E = ELECTRICAL EQUIPMENT
MT = ELEC MOTOR LOAD(S)
LMT = LARGEST MOTOR LOAD
H = ELECTRIC HEATING ONLY
M = MECHANICAL
P = PLUMBING

PHASE A BALANCE	29,660 VA	107.08 AMPS	33.5% OF LOAD
PHASE B BALANCE	29,660 VA	107.08 AMPS	33.5% OF LOAD
PHASE C BALANCE	29,220 VA	105.49 AMPS	33.0% OF LOAD

CONNECTED LOAD VA	**88,540**
CONNECTED LOAD AMPS	**106.49**
CORRECTED LOAD AMPS	**74.55**

ABBREVIATION DESCRIPTION

CB=CIRCUIT BREAKER	HP=HORSEPOWER	RCPT(S)=RECEPTACLE(S)
CKT=CIRCUIT	LTG=LIGHTING	SEC=SECURITY
CTRL=CONTROL	MTR=MOTOR	STD=STANDARD
FA=FIRE ALARM	PNL=PANEL	XFMR / XT=TRANSFORMER
FU=FUSE	PWR=POWER	GFCI-GROUND FAULT CIRCUIT INTERUPTOR

NOTES:
(1) FOR WIRE AND CONDUIT ADDITIONAL LOAD INFORMATION, REFER ONE-LINE DIAGRAM & FEEDER SCHEDULE.
(2) CONDUIT SIZES ACCOUNT FOR ALL CONDUCTORS AND GROUND WIRE FOR CIRCUIT.
(3)
(4)

PANEL: E PANEL
PANEL CIRCUITS: 42
LOCATION: COLUMN E

VOLTAGE: 480Y/277V, 3Ø, 4W
FED FROM: MDP
FED BY: (4) #1, #6G CU, 3"C

MAIN TYPE: MAIN LUG ONLY
MAIN AMPS:
BUS RATING: 125A
AIC RATING: 10,000
NEMA TYPE: NEMA 3R

PANEL MOUNTING: STRUT RACK

CIRCUIT NUMBER	DESCRIPTION	LOAD TYPE	PHASE LOAD VA	PHASE LOAD VA	PHASE LOAD VA	# OF POLES	BKR AMPS	WIRE SIZE	CONDUIT SIZE	A	B	C	CONDUIT SIZE	WIRE SIZE	BKR AMPS	# OF POLES	PHASE LOAD VA	PHASE LOAD VA	PHASE LOAD VA	LOAD TYPE	DESCRIPTION	CIRCUIT NUMBER
1	DS1 (GPU-E1)	E	7,205			3	40	8	1"	●			1"	8	40	3	7,205			E	DS3 (GPU-E3)	2
3	"	E		7,205		"	"	"	"		●		"	"	"	"		7,205		E	"	4
5	"	E			7,205	"	"	"	"			●	"	"	"	"			7,205	E	"	6
7	DS2 (GPU-E2)	E	7,205			3	40	8	1"	●			1"	8	40	3	7,205			E	DS4 (GPU-E4)	8
9	"	E		7,205		"	"	"	"		●		"	"	"	"		7,205		E	"	10
11	"	E			7,205	"	"	"	"			●	"	"	"	"			7,205	E	"	12
13	LTGS SS E	L	840			1	20	10	3/4"	●					20	1					SPARE	14
15	LTGS SS E	L		840		1	20	10	3/4"		●				20	1					SPARE	16
17	LTGS SS E OBSERVE	L			400	1	20	10	3/4"			●			20	1					SPARE	18
19	SPARE					3	25			●					20	1					SPARE	20
21	SPARE					"	"				●				20	1					SPARE	22
23	SPARE					"	"					●			20	1					SPARE	24
25	SPARE					1	20			●					20	1					SPARE	26
27	SPARE					1	20				●				20	1					SPARE	28
29	SPARE					1	20					●			20	1					SPARE	30
31	SPACE									●											SPACE	32
33	SPACE										●										SPACE	34
35	SPACE											●									SPACE	36
37	SPACE									●											SPACE	38
39	SPACE										●										SPACE	40
41	SPACE											●									SPACE	42

PHASE	A	B	C
VA	15,250	15,250	14,810
AMPS	55.05	55.05	53.47
PHASE BALANCE %	33.66%	33.66%	32.69%

A	B	C	PHASE
14,410	14,410	14,410	VA
52.02	52.02	52.02	AMPS
33.33%	33.33%	33.33%	PHASE BALANCE %

LEGEND

LOAD TYPE

* = GFCI RCPT OR BREAKER
** = AFCI CIRCUIT BREAKER
L = LIGHTING
R = RECEPTACLES
E = ELECTRICAL EQUIPMENT
MT = ELEC MOTOR LOAD(S)
LMT = LARGEST MOTOR LOAD
H = ELECTRIC HEATING ONLY
M = MECHANICAL
P = PLUMBING

PHASE A BALANCE	29,660 VA	107.08 AMPS	33.5% OF LOAD
PHASE B BALANCE	29,660 VA	107.08 AMPS	33.5% OF LOAD
PHASE C BALANCE	29,220 VA	105.49 AMPS	33.0% OF LOAD

CONNECTED LOAD VA	**88,540**
CONNECTED LOAD AMPS	**106.49**
CORRECTED LOAD AMPS	**74.55**

ABBREVIATION DESCRIPTION

CB=CIRCUIT BREAKER	HP=HORSEPOWER	RCPT(S)=RECEPTACLE(S)
CKT=CIRCUIT	LTG=LIGHTING	SEC=SECURITY
CTRL=CONTROL	MTR=MOTOR	STD=STANDARD

NOTES:
(1) FOR WIRE AND CONDUIT ADDITIONAL LOAD INFORMATION, REFER ONE-LINE DIAGRAM & FEEDER SCHEDULE.
(2) CONDUIT SIZES ACCOUNT FOR ALL CONDUCTORS AND GROUND WIRE FOR CIRCUIT.
(3)

ALTERNATE #1

PANEL: D PANEL
PANEL CIRCUITS: 42
LOCATION: COLUMN D

VOLTAGE: 480Y/277V, 3Ø, 4W
FED FROM: MDP
FED BY: (4) #1, #6G CU, 3"C

MAIN TYPE: MAIN LUG ONLY
MAIN AMPS:
BUS RATING: 125A
AIC RATING: 10,000
NEMA TYPE: NEMA 3R

PANEL MOUNTING: STRUT RACK

CIRCUIT NUMBER	DESCRIPTION	LOAD TYPE	PHASE LOAD VA	PHASE LOAD VA	PHASE LOAD VA	# OF POLES	BKR AMPS	WIRE SIZE	CONDUIT SIZE	A	B	C	CONDUIT SIZE	WIRE SIZE	BKR AMPS	# OF POLES	PHASE LOAD VA	PHASE LOAD VA	PHASE LOAD VA	LOAD TYPE	DESCRIPTION	CIRCUIT NUMBER
1	DS1 (GPU-D1)	E	7,205			3	40	8	1"	●			1"	8	40	3	7,205			E	DS3 (GPU-D3)	2
3	"	E		7,205		"	"	"	"		●		"	"	"	"		7,205		E	"	4
5	"	E			7,205	"	"	"	"			●	"	"	"	"			7,205	E	"	6
7	DS2 (GPU-D2)	E	7,205			3	40	8	1"	●			1"	8	40	3	7,205			E	DS4 (GPU-D4)	8
9	"	E		7,205		"	"	"	"		●		"	"	"	"		7,205		E	"	10
11	"	E			7,205	"	"	"	"			●	"	"	"	"			7,205	E	"	12
13	LTGS SS D	L	840			1	20	10	3/4"	●					20	1					SPARE	14
15	LTGS SS D	L		840		1	20	10	3/4"		●				20	1					SPARE	16
17	LTGS SS D OBSERVE	L			400	1	20	10	3/4"			●			20	1					SPARE	18
19	SPARE					3	25			●					20	1					SPARE	20
21	SPARE					"	"				●				20	1					SPARE	22
23	SPARE					"	"					●			20	1					SPARE	24
25	SPARE					1	20			●					20	1					SPARE	26
27	SPARE					1	20				●				20	1					SPARE	28
29	SPARE					1	20					●			20	1					SPARE	30
31	SPACE									●											SPACE	32
33	SPACE										●										SPACE	34
35	SPACE											●									SPACE	36
37	SPACE									●											SPACE	38
39	SPACE										●										SPACE	40
41	SPACE											●									SPACE	42

PHASE	A	B	C
VA	15,250	15,250	14,810
AMPS	55.05	55.05	53.47
PHASE BALANCE %	33.66%	33.66%	32.69%

A	B	C	PHASE
14,410	14,410	14,410	VA
52.02	52.02	52.02	AMPS
33.33%	33.33%	33.33%	PHASE BALANCE %

LEGEND

LOAD TYPE

* = GFCI RCPT OR BREAKER
** = AFCI CIRCUIT BREAKER
L = LIGHTING
R = RECEPTACLES
E = ELECTRICAL EQUIPMENT
MT = ELEC MOTOR LOAD(S)
LMT = LARGEST MOTOR LOAD
H = ELECTRIC HEATING ONLY
M = MECHANICAL
P = PLUMBING

PHASE A BALANCE	29,660 VA	107.08 AMPS	33.5% OF LOAD
PHASE B BALANCE	29,660 VA	107.08 AMPS	33.5% OF LOAD
PHASE C BALANCE	29,220 VA	105.49 AMPS	33.0% OF LOAD

CONNECTED LOAD VA	**88,540**
CONNECTED LOAD AMPS	**106.49**
CORRECTED LOAD AMPS	**74.55**

ABBREVIATION DESCRIPTION

CB=CIRCUIT BREAKER	HP=HORSEPOWER	RCPT(S)=RECEPTACLE(S)
CKT=CIRCUIT	LTG=LIGHTING	SEC=SECURITY
CTRL=CONTROL	MTR=MOTOR	STD=STANDARD

NOTES:
(1) FOR WIRE AND CONDUIT ADDITIONAL LOAD INFORMATION, REFER ONE-LINE DIAGRAM & FEEDER SCHEDULE.
(2) CONDUIT SIZES ACCOUNT FOR ALL CONDUCTORS AND GROUND WIRE FOR CIRCUIT.
(3)

ALTERNATE #2

STATE OF TEXAS
DEAN T. ALDERSON
54441
LICENSED
PROFESSIONAL ENGINEER
11/17/16
Alderson & Associates, Inc.
F-1008

PROJECT # 16058

Alderson & Associates, Inc.
7700 Torino St, Suite 101
San Antonio, TX 78229
Telephone: 210.614.1110
©2016 Alderson & Associates, Inc.
F-1008

REVISIONS		
NO	DATE	DESCRIPTION

CITY OF DEL RIO, TEXAS
LAUGHLIN AIR FORCE BASE
T-6 PREFABRICATED AIRCRAFT SUN SHADES

ELECTRICAL SCHEDULES

JOB No: C-123922
DATE: 11/17/16
DRAWN BY: DTA
CHECKED BY: DTA
SHEET E4.4

PREPARED BY:
BAIN MEDINA BAIN, INC.
ENGINEERS & SURVEYORS
7073 San Pedro
San Antonio, Texas 78216
210/494-7223

PRINTED: 11/23/2016 @ 11:13AM

FILE NAME: P:\16058 T-6 Prefabricated Aircraft Sun Shades\Drawings\MEP\Elec\E4.4.dwg

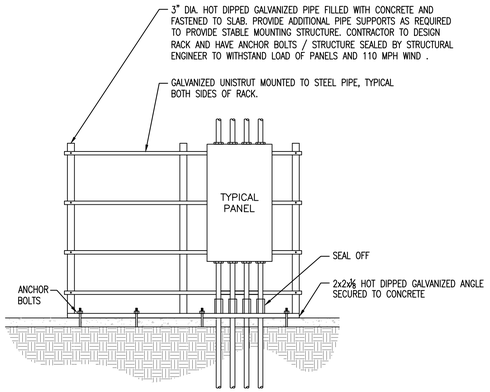

1 **ELECTRICAL EQUIPMENT RACK DETAIL**

SCALE: NOT TO SCALE

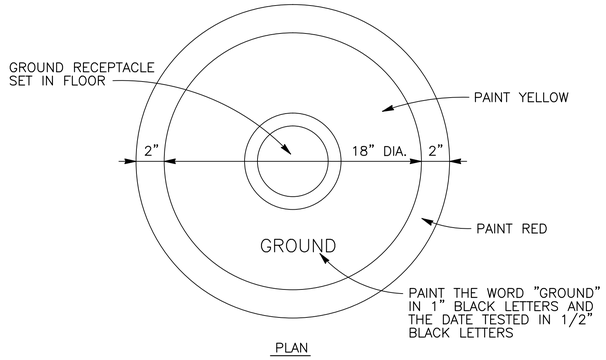

PLAN

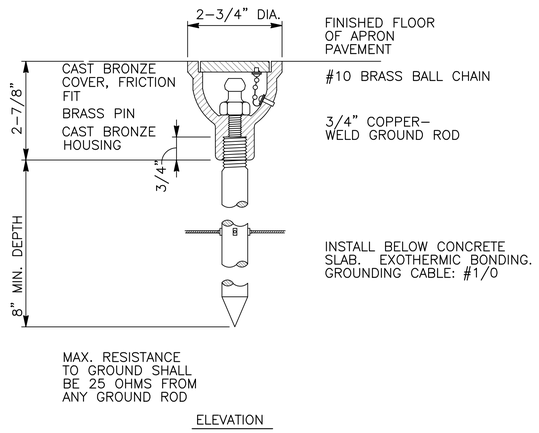

ELEVATION

2 STATIC GROUNDING RECEPTACLE DETAIL AT STRUCTURE

N.T.S.

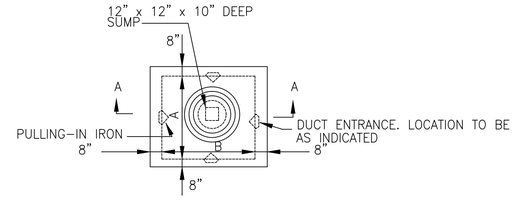

PLAN

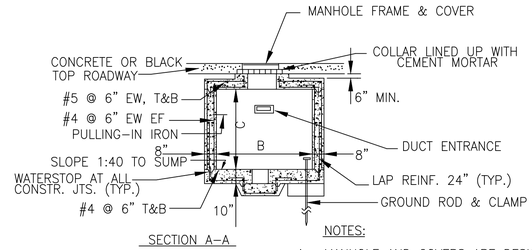

SECTION A-A

NOTES:

1. MANHOLE AND COVERS ARE DESIGNED FOR MAXIMUM WHEEL LOAD IN ACCORDANCE WITH AASHTO HS20-44.
2. FOR DETAILS OF CABLE RACKS, DUCT ENTRANCE AND PULLING-IN IRONS, SEE DETAILS THIS SHEET
3. MINIMUM CONCRETE COMPRESSIVE STRENGTH SHALL BE 3000 PSI.

MANHOLE DIMENSIONS		
A	B	C (AT HIGH PT.)
4'-0"	6'-0"	7'-0"

ELECTRICAL MANHOLE (TRAFFIC)

3 **POWER MANHOLE DETAILS**

SCALE: NOT TO SCALE

PRINTED: 11/23/2016 @ 11:14AM

FILE NAME: P:\16058 T-6 Prefabricated Aircraft Sun Shades\Drawings\MEP\Elec\E5.1.dwg

STATE OF TEXAS
DEAN T. ALDERSON
54441
LICENSED
PROFESSIONAL ENGINEER
11/17/16
Alderson & Associates, Inc.
F-1008

PROJECT # 16058

Alderson & Associates, Inc.

7700 Torino St, Suite 101
San Antonio, TX 78229
Telephone: 210.614.1110
©2016 Alderson & Associates, Inc.
F-1008

REVISIONS		
NO	DATE	DESCRIPTION

CITY OF DEL RIO, TEXAS
LAUGHLIN AIR FORCE BASE
T-6 PREFABRICATED AIRCRAFT SUN SHADES

ELECTRICAL DETAILS I

JOB No: C-1239.22
DATE: 11/17/16
DRAWN BY: DTA
CHECKED BY: DTA
SHEET E5.1

PREPARED BY:
BAIN MEDINA BAIN, INC.
ENGINEERS & SURVEYORS
7073 San Pedro
San Antonio, Texas 78216
210/494-7223

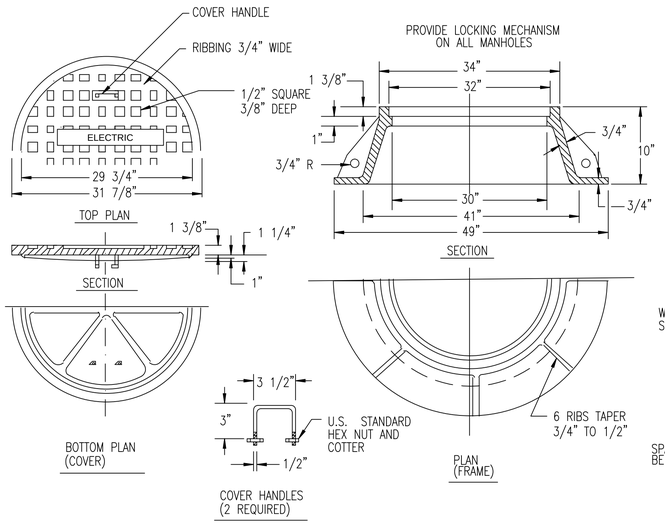

1 MANHOLE COVER & FRAME DETAIL

SCALE: NOT TO SCALE

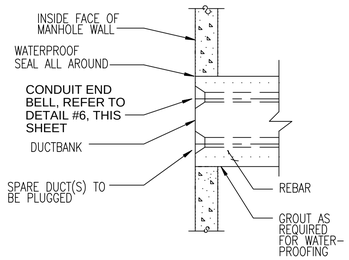

2 TYPICAL DUCT BANK ENTRANCE AT MANHOLE

SCALE: NOT TO SCALE

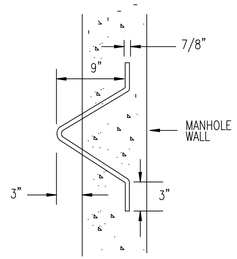

3 PULLING IRON DETAIL

SCALE: NOT TO SCALE

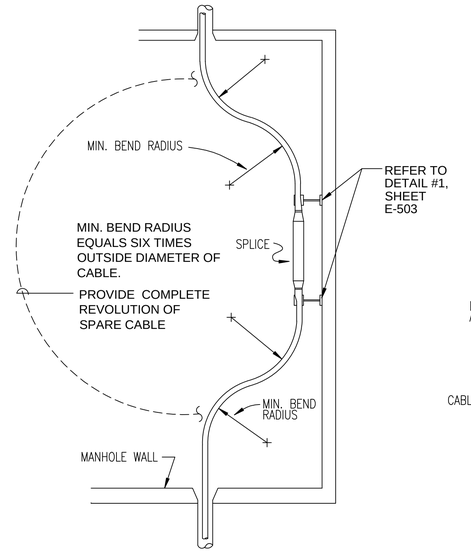

4 MANHOLE CABLE INSTALLATION

SCALE: NOT TO SCALE

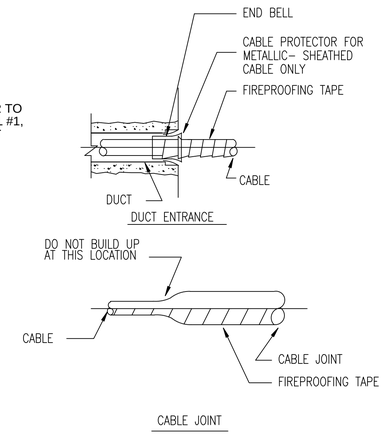

5 FIREPROOFING DETAIL

SCALE: NOT TO SCALE

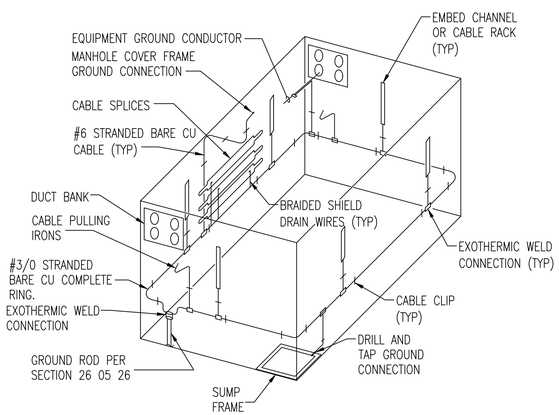

6 MANHOLE GROUNDING DETAILS

SCALE: NOT TO SCALE

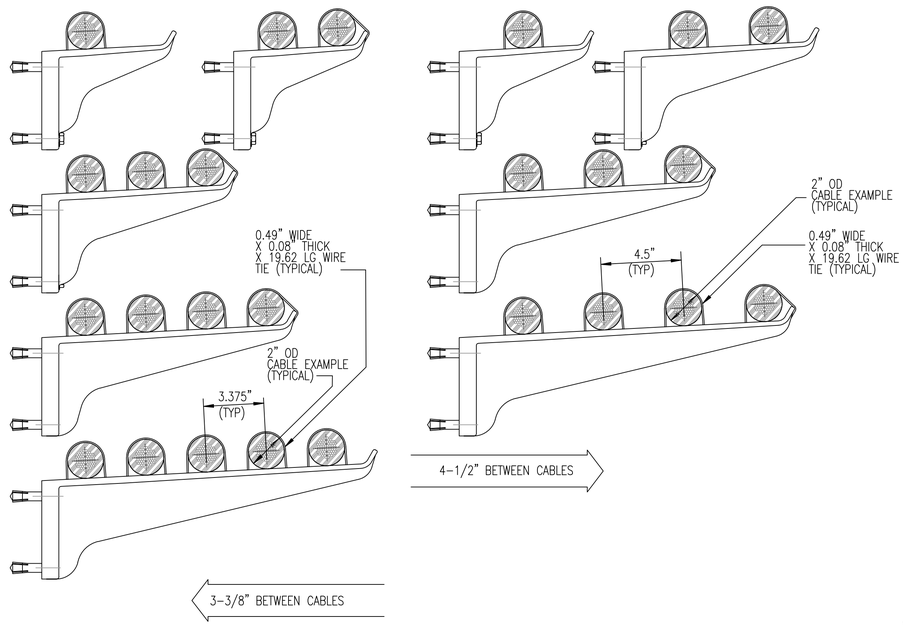

7 TYPICAL INSTALLATION OF CABLES AND CABLE RACKS

SCALE: NOT TO SCALE

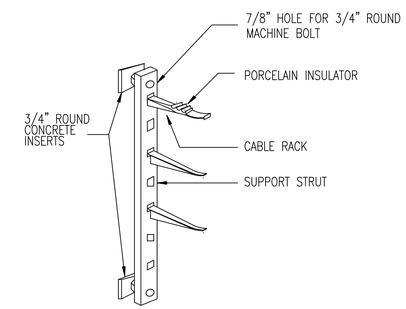

8 CABLE RACK DETAIL

SCALE: NOT TO SCALE

STATE OF TEXAS
DEAN T. ALDERSON
54441
LICENSED PROFESSIONAL ENGINEER
11/17/16

Alderson & Associates, Inc.
F-1008

PROJECT # 16058

Alderson & Associates, Inc.

7700 Torino St, Suite 101
San Antonio, TX 78229
Telephone: 210.614.1110
©2016 Alderson & Associates, Inc.
F-1008

REVISIONS		
NO	DATE	DESCRIPTION

CITY OF DEL RIO, TEXAS
LAUGHLIN AIR FORCE BASE
T-6 PREFABRICATED AIRCRAFT SUN SHADES

ELECTRICAL DETAILS II

PREPARED BY:
BAIN MEDINA BAIN, INC.
ENGINEERS & SURVEYORS
7073 San Pedro
San Antonio, Texas 78216
210/494-7223

JOB No:	C-12392.22
DATE:	11/17/16
DRAWN BY:	DTA
CHECKED BY:	DTA
SHEET	E5.2

PRINTED: 11/23/2016 @ 11:14AM

FILE NAME: P:\16058 T-6 Prefabricated Aircraft Sun Shades\Drawings\MEP\Elec\E5.2.dwg

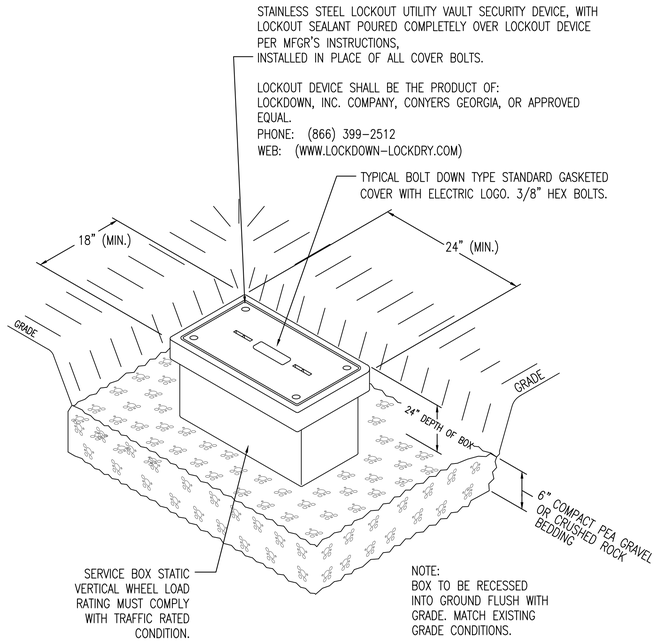

1 **SITE - TYPICAL HANDHOLE PULL BOX INSTALLATION**

SCALE: NOT TO SCALE

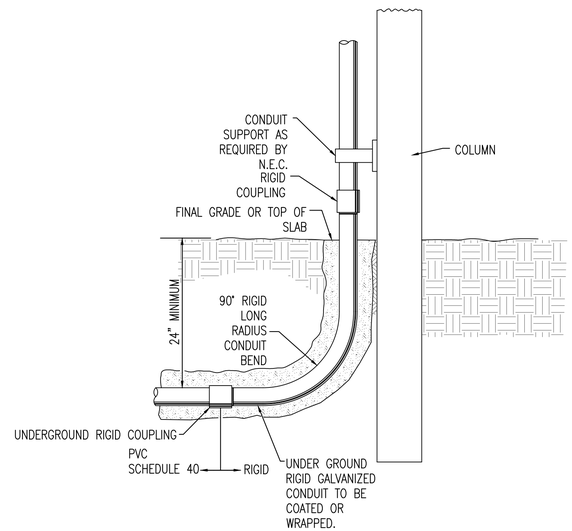

2 **TYPICAL CONDUIT STUB-UP DETAIL**

SCALE: NOT TO SCALE

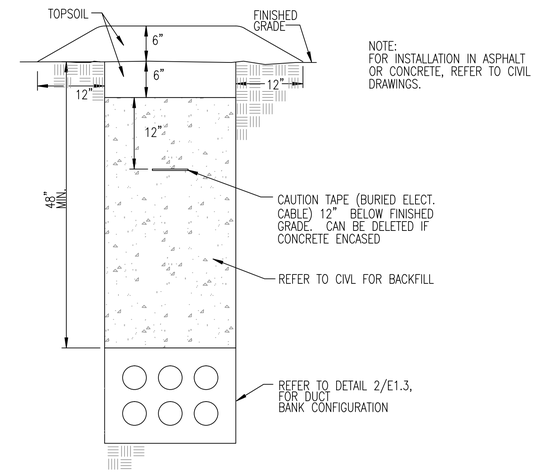

3 **TYPICAL DUCT INSTALLATION IN UNPAVED AREA**

SCALE: NOT TO SCALE

STATE OF TEXAS
DEAN T. ALDERSON
54441
LICENSED
PROFESSIONAL ENGINEER
11/17/16
Alderson & Associates, Inc.
F-1008

PROJECT # 16058

Alderson & Associates, Inc.

7700 Torino St, Suite 101
San Antonio, TX 78229
Telephone: 210.614.1110
©2016 Alderson & Associates, Inc.
F-1008

REVISIONS		
NO	DATE	DESCRIPTION

CITY OF DEL RIO, TEXAS
LAUGHLIN AIR FORCE BASE
T-6 PREFABRICATED AIRCRAFT SUN SHADES

ELECTRICAL DETAILS III

PREPARED BY:
BAIN MEDINA BAIN, INC.
ENGINEERS & SURVEYORS
7073 San Pedro
San Antonio, Texas 78216
210/494-7223

JOB No: C-123922
DATE: 11/17/16
DRAWN BY: DTA
CHECKED BY: DTA
SHEET E5.3

PRINTED: 11/23/2016 @ 11:14AM

FILE NAME: P:\16058 T-6 Prefabricated Aircraft Sun Shades\Drawings\MEP\Elec\E5.3.dwg

Plan of 750-1000 kVA Padmount Transformer resting on Concrete Pad

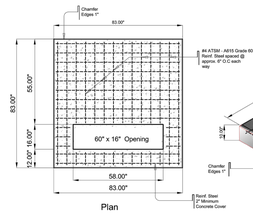

Plan

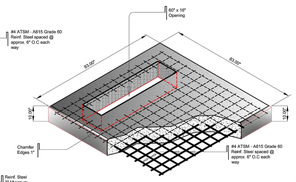

Isometric View

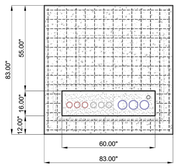

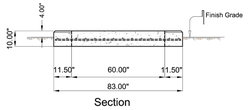

Section

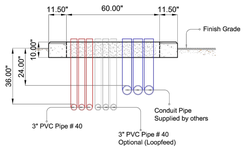

CONCRETE PAD DETAILS

(Three Phase Transformer Concrete Pad)

NOTES :

1. Concrete Testing, 3000 pounds min. per square inch, 4% to 6% entrained air, 3/4 inch size aggregate.
2. Reinforcing Steel, ASTM-A615 Grade 60. Place approx. 8" O.C each way and securely tied together.
3. Minimum concrete cover over reinforcing steel 2 inches unless noted.
4. All dimensions Unit in inches

Owner :

RIO GRANDE ELECTRIC COOPERATIVE INC.
P.O. BOX 1509
BRACKETTVILLE, TEXAS 78832
TEL. 830-563-2444

Drawing Ownership :

This Drawing is the sole property of Rio Grande Electric Cooperative Inc., and may not be disclosed,copied or duplicated wholly or partly without prior written consent of the owner.

ENGINEERING DEPARTMENT

Project Title : TRENCHING and CONDUIT INSTALLATION

Project Location : | **Work Order No.** | **Date :**

Sheet Content : Three PhaseTransformer Concrete Pad And Conduit Details

Revision	Date :	Initial :

Drawn By :	Checked :	Approved :
gbd	gbd	

Drawing No. :	Date
RGEC /	11-08-16

Sheet No. :	Total Sheet :	Scale :
1	2	n.t.s.

① 3" ALUMINUM CONDUIT SCH#40 FOR RISER
② TEMPORARY 3" PVC PLUG SCH#40 (if Required)
③ ADAPTER, FEMALE 3"
④ 90 DEG. ELBOW 30-36" WIDE SWEEP
⑤ 3" PVC PIPE BELL END SCH#40

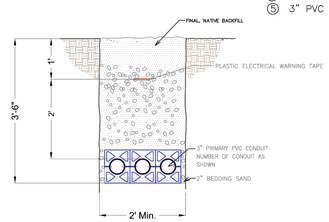

TRENCH DETAIL 3-PHASE

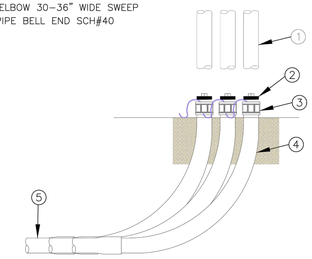

Owner :

RIO GRANDE ELECTRIC COOPERATIVE INC.
P.O. BOX 1509
BRACKETTVILLE, TEXAS 78832
TEL. 830-563-2444

Drawing Ownership :

This Drawing is the sole property of Rio Grande Electric Cooperative Inc., and may not be disclosed,copied or duplicated wholly or partly without prior written consent of the owner.

ENGINEERING DEPARTMENT

Project Title : TRENCHING AND CONDUIT DETAILS

Project Location : | **Work Order No.** | **Date :**

Sheet Content : Three Phase Trenching and Conduit Installation

Revision	Date :	Initial :

Drawn By :	Checked :	Approved :
gbd	gbd	

Drawing No. :	Date
RGEC /	11-08-16

Sheet No. :	Total Sheet :	Scale :
2	2	n.t.s.

1 ELECTRICAL SERVICE UTILITY REQUIREMENT

SCALE: NOT TO SCALE

PRINTED: 11/23/2016 @ 11:15AM

FILE NAME: P:\16058 T-6 Prefabricated Aircraft Sun Shades\Drawings\MEP\Elec\E5.4.dwg

STATE OF TEXAS
DEAN T. ALDERSON
54441
LICENSED
PROFESSIONAL ENGINEER
11/17/16

Alderson & Associates, Inc.
F-1008

PROJECT # 16058

Alderson & Associates, Inc.
7700 Torino St, Suite 101
San Antonio, TX 78229
Telephone: 210.614.1110
©2016 Alderson & Associates, Inc.
F-1008

REVISIONS		
NO	DATE	DESCRIPTION

CITY OF DEL RIO, TEXAS
LAUGHLIN AIR FORCE BASE
T-6 PREFABRICATED AIRCRAFT SUN SHADES

ELECTRICAL DETAILS IV

JOB No: C-1238.22
DATE: 11/17/16
DRAWN BY: DTA
CHECKED BY: DTA
SHEET E5.4

PREPARED BY:
BAIN MEDINA BAIN, INC.
ENGINEERS & SURVEYORS
7073 San Pedro
San Antonio, Texas 78216
210/494-7223